Self Diagnosis Supported model

SERVICE MANUAL

CPD-G220R/G220S

CPD-G220R

US/Canada Model

Chassis No: SCC-L38A-A

CPD-G220S

US/Canada Model

Chassis No: SCC-L38A-A

17VC CHASSIS

SPECIFICATIONS

Picture tube 0.24 mm aperture grill pitch (center)
17 inches measured diagonally
90-degree deflection

Video image area (16.1" maximum viewing image)
Approx. 328 X 242 mm (w/h)
(13 x $9^{5/8}$ inches)

Resolution Horizontal: Max. 1600 dots
Vertical: Max. 1200 lines

Standard image area Approx. 312 x 234 mm (w/h)
($12^{3/8}$ x $9^{1/4}$ inches)

Input signal

Video Analog RGB (75 ohms typical)
0.7 Vp-p, ±5%, Positive

Sync Separate HD/VD,
TTL Polarity Free
External Composite,
TTL Polarity Free (2K ohms impedance)
Sync on Green

Power Consumption 115 W

Deflection frequency Horizontal: 30 to 85 KHz
Vertical: 48 to 170 Hz

AC input voltage/current 100 to 120 V, 50/60 Hz, 1.7A
220 to 240V, 50/60Hz, 0.9A

Dimensions 402 x 418 x 421 mm (w/h/d)
($15^{7/8}$ x $16^{1/2}$ x $16^{5/8}$ inches)

Mass Approx. 19 kg (41 lb 14 oz.)

Design and specifications are subject to change without notice.

TRINITRON® COLOR MONITOR

SONY®

9-978-877-01

Downloaded from www.Manualslib.com manuals search engine

TABLE OF CONTENTS

SECTION TITLE PAGE

Power Management ... 3
Self Diagnosis Function ... 3
Timing Specification ... 3
Safety Check Out Instructions ... 4
Warnings and Cautions ... 4

1. Disassembly
1-1. Cabinet Removal ... 5
1-2. Service Position ... 5
1-3. A & D Board Removal ... 6
1-4. Picture Tube Removal ... 7

2. Safety Related Adjustments
2-1. HV Regulator Check ... 8
2-2. HV Protector Circuit Check ... 8
2-3. Beam Protector Check (Software Logic) ... 8
2-4. B+ Voltage Check ... 8

3. Adjustments
3-1. Landing Rough Adjustment ... 9
3-2. Landing Fine Adjustment ... 9
3-3. Convergence Rough Adjustment ... 9
3-4. Convergence and V. Key (H. TRP) Fine Adjustment ... 9
3-5. Vertical and Horizontal Position and Size Specification ... 10
3-6. Focus Adjustment ... 10
3-7. Digital Convergence Adjustment ... 11
3-8. Convergence Specification ... 11

4. Diagrams
4-1. Circuit Boards Location ... 12
4-2. Schematic Diagrams And Printed Wiring Boards ... 12
4-3. Diagrams
Block Diagram ... 13
A Board - Schematic Diagram ... 15
D Board - Schematic Diagram ... 17
H1 Board - Schematic Diagram ... 20
U Board - Schematic Diagram ... 21
4-4. Semiconductors ... 22

5. Exploded Views
5-1. Picture Tube ... 23
5-2. Chassis ... 24
5-2. Packing Materials ... 25

6. Electrical Parts List ... 26

Downloaded from www.Manualslib.com manuals search engine

POWER MANAGEMENT

The power saving mode complies with the VESA Display Power Management Signaling standard. Each state of power management shall be activated by the host computer terminating the appropriate sync signals. Blanking the video must precede termination of the sync signals. The elapsed time counter shall also be controlled by the host computer. Reactivation of the monitor shall be accomplished from the host computer by re-establishing the normal sync signal.

	Power consumption mode	Screen (video)	Horizontal sync signal	Vertical sync signal	Power consumption	Recovery time	⏻ indicator
1	Normal operation	active	yes	yes	≤ 115 W	--	Green
2	Active-off (3rd mode)	blank	no*	no*	≤ 3 W	Approx. 10 sec.	Orange
3	Power-off	--	--	--	0 W (approx)	--	Off

* In this mode, the signal will appear in one of three ways: The Horizontal Sync Signal alone off, the Vertical Sync Signal alone off, or both signals off.

SELF DIAGNOSIS FUNCTION

When a failure occurs, the STANDBY/TIMER lamp will flash a set number of times to indicate the possible cause of the problem. If there is more than one error, the lamp will identify the first of the problem areas.

	Status	Area of Failure	LED Indication
1	Failure 1	HV or +B	Amber (0.5 second)/Off (0.5 second)
2	Failure 2	H Stop, V Stop or S Connection Failure	Amber (1.5 second)/Off (0.5 second)
3	Failure 3	ABL	Amber (0.5 second)/Off (0.5 second)
4	Aging/Self Test		Amber (0.5 second)/Off (0.5 second)/ Green (0.5 second)/Off (0.5 second)

TIMING SPECIFICATION

MODE	1	2	3	4	Test Mode 5	6	7	8
Resolution (H x V)	640 X 480	800 X 600	832 X 624	1024 X 768	1024 X 768	720 X 400	640 X 480	1280 X 1024
Dot Clock (MHz)	25.175	56.250	57.238	78.750	94.500	28.322	36.000	135.000
HORIZONTAL								
Hor. Freq. (kHz)	31.469	53.674	49.725	60.023	68.677	31.469	43.269	79.976
H-Total	31.778	18.631	20.111	16.660	14.561	31.777	23.111	12.504
H-Blanking	6.356	4.409	5.586	3.657	3.725	6.355	5.333	3.022
H-Front Porch	0.636	0.569	0.559	0.203	0.508	0.636	1.556	0.119
H-Sync.	3.813	1.138	1.117	1.219	1.016	3.813	1.556	1.067
H-Back Porch	1.907	2.702	3.910	2.235	2.201	1.907	2.222	1.837
H-Active (µsec)	25.422	14.222	14.524	13.003	10.836	25.422	17.778	9.481
VERTICAL								
Ver. Freq. (Hz)	59.940	85.061	74.550	75.029	84.997	70.087	85.008	75.025
V-Total	525	631	667	800	808	449	509	1066
V-Blanking	45	31	43	32	40	49	29	42
V-Front Porch	10	1	1	1	1	12	1	1
V-Sync.	2	3	3	3	3	2	3	3
V-Back Porch	33	27	39	28	36	35	25	38
V-Active (lines)	480	600	624	768	768	400	480	1024
SYNC.								
Int (G)	NO	NO	NO	NO	NO	NO	NO	NO
Ext (H/V)/Polarity	YES -/-	NO +/+	YES -/-	YES +/+	YES +/+	YES -/+	YES -/-	YES +/+
Ext (C/S)/Polarity	NO	NO	NO	NO	NO	NO	NO	NO
Int/Non Int	NON INT	NON INT	NON INT	NON INT	NON INT	NON INT	NON INT	NON INT

Downloaded from www.Manualslib.com manuals search engine

SAFETY CHECK-OUT

After correcting the original service problem, perform the following safety checks before releasing the set to the customer:

1. Check the area of your repair for unsoldered or poorly soldered connections. Check the entire board surface for solder splashes and bridges.
2. Check the interboard wiring to ensure that no wires are “pinched” or touching high-wattage resistors.
3. Check that all control knobs, shields, covers, ground straps, and mounting hardware have been replaced. Be absolutely certain that you have replaced all the insulators.
4. Look for unauthorized replacement parts, particularly transistors, that were installed during a previous repair. Point them out to the customer and recommend their replacement.
5. Look for parts which, though functioning, show obvious signs of deterioration. Point them out to the customer and recommend their replacement.
6. Check the line cords for cracks and abrasion. Recommend the replacement of any such line cord to the customer.
7. Check the B+ and HV to see if they are specified values. Make sure your instruments are accurate; be suspicious of your HV meter if sets always have low HV.
8. Check the antenna terminals, metal trim, “metallized” knobs, screws, and all other exposed metal parts for AC leakage. Check leakage as described below.

Leakage Test

The AC leakage from any exposed metal part to earth ground and from all exposed metal parts to any exposed metal part having a return to chassis, must not exceed 0.5 mA (500 microamperes). Leakage current can be measured by any one of three methods.

1. A commercial leakage tester, such as the Simpson 229 or RCA WT-540A. Follow the manufacturers’ instructions to use these instructions.
2. A battery-operated AC milliammeter. The Data Precision 245 digital multimeter is suitable for this job.
3. Measuring the voltage drop across a resistor by means of a VOM or battery-operated AC voltmeter. The “limit” indication is 0.75 V, so analog meters must have an accurate low voltage scale. The Simpson’s 250 and Sanwa SH-63TRD are examples of passive VOMs that are suitable. Nearly all battery-operated digital multimeters that have a 2 VAC range are suitable (see Figure A).

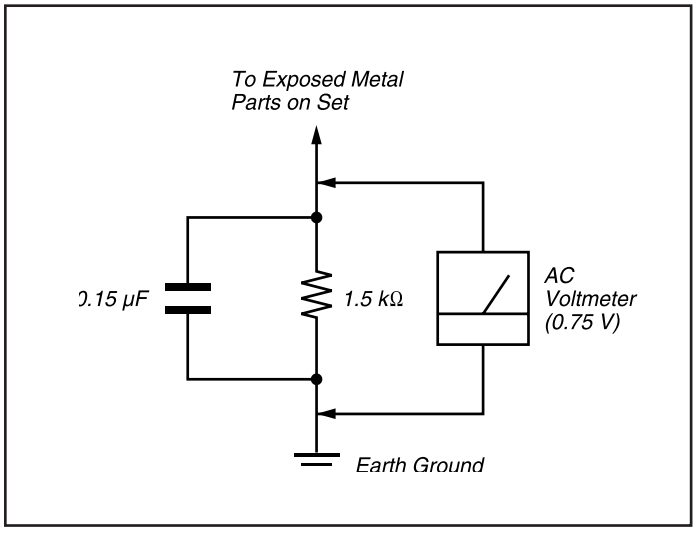

Figure A. Using an AC voltmeter to check AC leakage.

WARNINGS AND CAUTIONS

WARNING!!

NEVER TURN ON THE POWER IN A CONDITION IN WHICH THE DEGAUSS COIL HAS BEEN REMOVED.

SAFETY REALTED COMPONENT WARNING!!

COMPONENTS IDENTIFIED BY SHADING MARK ! ON THE SCHEMATIC DIAGRAMS, EXPLODED VIEWS AND IN THE PARTS LIST ARE CRITICAL FOR SAFE OPERATION. REPLACE THESE COMPONENTS WITH SONY PARTS WHOSE PART NUMBERS APPEAR AS SHOWN IN THIS MANUAL OR IN SUPPLEMENTS PUBLISHED BY SONY. CIRCUIT ADJUSTMENTS THAT ARE CRITICAL FOR SAFE OPERATION ARE IDENTIFIED IN THIS MANUAL. FOLLOW THESE PROCEDURES WHENEVER CRITICAL COMPONENTS ARE REPLACED OR IMPROPER OPERATION IS SUSPECTED.

AVERTISSEMENT!!

NE JAMAIS METTRE SOUS TENSION QUAND LA BOBINE DE DEMAGNETISATION EST ENLEVEE.

ATTENTION AUX COMPOSANTS RELATIFS A LA SECURITE!!

LES COMPOSANTS IDENTIFIES PAR UNE TRAME ET PAR UNE MARQUE SUR LES SCHEMAS DE PRINCIPE, LES VUES EXPLOSEES ET LES LISTES DE PIECES SONT D’UNE IMPORTANCE CRITIQUE POUR LA SECURITE DU FONCTIONNEMENT. NE LES REMPLACER QUE PAR DES COMPOSANTS SONY DONT LE NUMERO DE PIECE EST INDIQUE DANS LE PRESENT MANUEL OU DANS DES SUPPLEMENTS PUBLIES PAR SONY. LES REGLAGES DE CIRCUIT DONT L’IMPORTANCE EST CRITIQUE POUR LA SECURITE DU FONCTIONNEMENT SONT IDENTIFIES DANS LE PRESENT MANUEL. SUIVRE CES PROCEDURES LORS DE CHAQUE REMPLACEMENT DE COMPOSANTS CRITIQUES, OU LORSQU’UN MAUVAIS FONTIONNEMENT SUSPECTE.

Downloaded from www.Manualslib.com manuals search engine

SECTION 1: DISASSEMBLY

1-1. CABINET REMOVAL

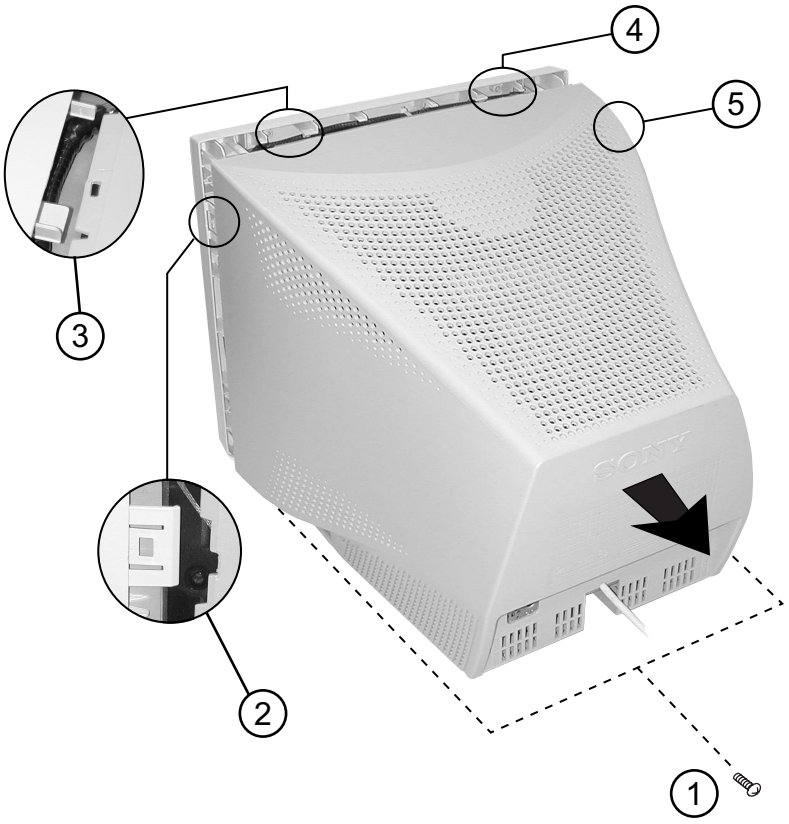

1. Remove (2) Screws (+BVTP 4 x 16)
2. Release side claw - Insert the tip of a flathead screwdriver approximately 0.25" to unlock the claw.
3. Release top claw - Working from the same side as the the claw in step 2, insert the tip of a flathead screwdriver to unlock the top claw.
4. Release top claw - Repeat Step 3 on the opposite side.
5. Release side claw - Repeat Step 2 on the opposite side and gently lift up and then back to remove the cabinet.

1-2. SERVICE POSITION

1. Gently wiggle the A board back and forth to unplug it from the Neck Assembly.
2. Remove all necessary connections and rotate the D Board and rest it on its side to expose the bottom. Be sure to reconnect all wires.

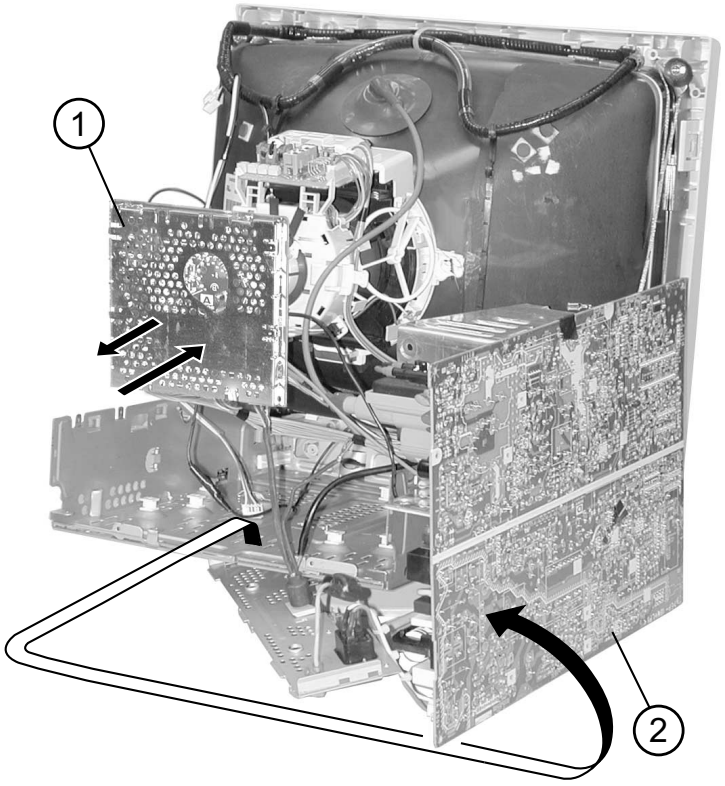

1. When the D-board is placed in service position, the Safety Earth Wire (green and yellow wire) is disconnected.

2. After service is completed and the D-board reinstalled, the Safety Earth Wire must be reattached to the chassis with the proper screw. This must be confirmed before any subsequent procedures are attempted.

Downloaded from www.Manualslib.com manuals search engine

1-3. A & D BOARD REMOVAL

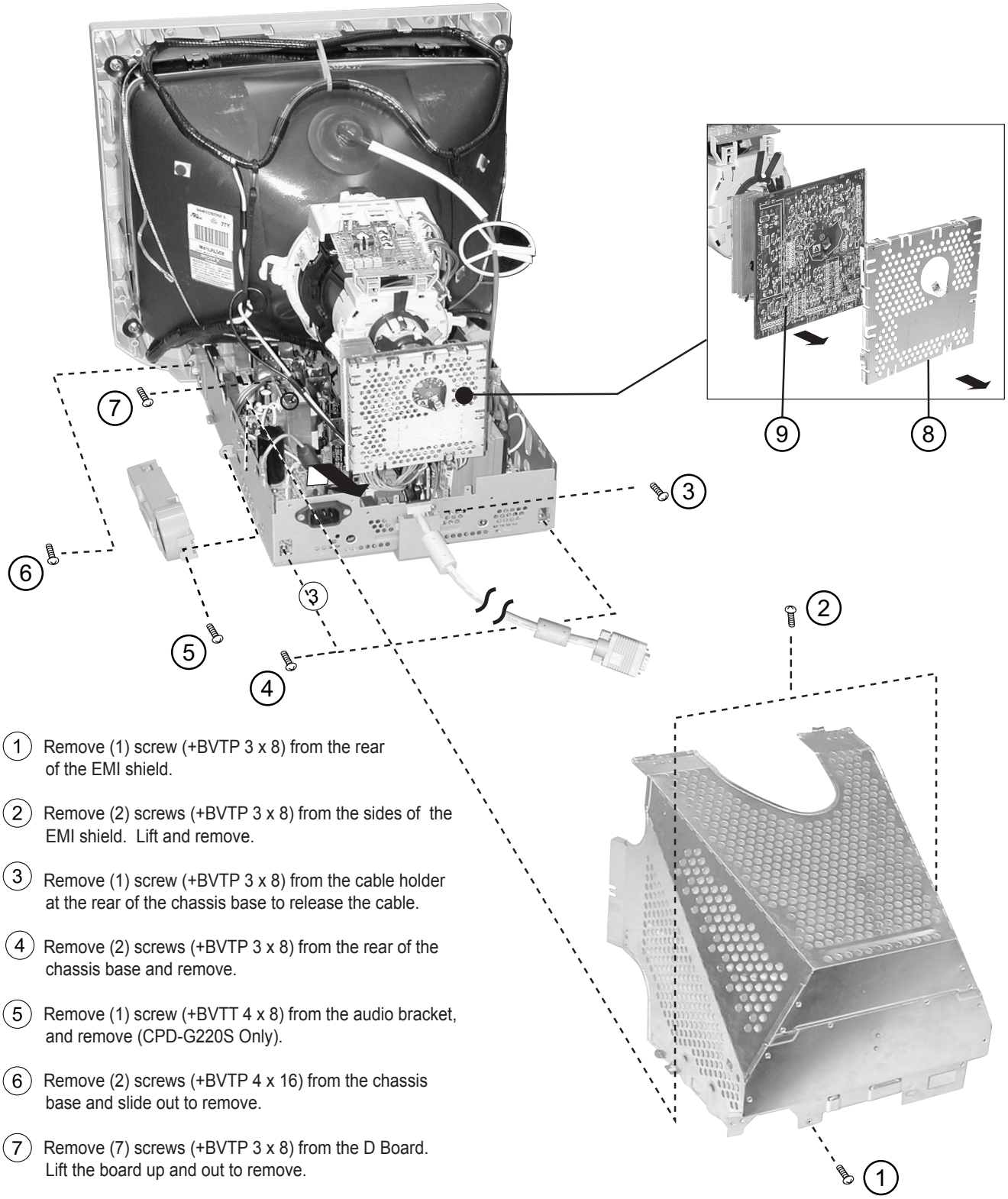

1. Remove (1) screw (+BVTP 3 x 8) from the rear of the EMI shield.
2. Remove (2) screws (+BVTP 3 x 8) from the sides of the EMI shield. Lift and remove.
3. Remove (1) screw (+BVTP 3 x 8) from the cable holder at the rear of the chassis base to release the cable.
4. Remove (2) screws (+BVTP 3 x 8) from the rear of the chassis base and remove.
5. Remove (1) screw (+BVTT 4 x 8) from the audio bracket, and remove (CPD-G220S Only).
6. Remove (2) screws (+BVTP 4 x 16) from the chassis base and slide out to remove.
7. Remove (7) screws (+BVTP 3 x 8) from the D Board. Lift the board up and out to remove.
8. Carefully remove the solder connections, and remove the shield cover from the A board
9. Gently wiggle the A board back and forth, and pull it to remove.

Downloaded from www.Manualslib.com manuals search engine

1-4. PICTURE TUBE REMOVAL

1. Place the unit face down on a cushion to avoid scratching.
2. Remove the anode cap.
3. Remove (4) screws (Screw (5) Tapping) from the CRT.
4. Remove the picture tube shield.
5. Remove the deflection yoke.
6. Remove the neck assembly.
7. Remove the A board.
8. Remove the demagnetization coil.
9. Remove (2) screws (BVTP 4 x 16) from the chassis assembly and slide out to remove.

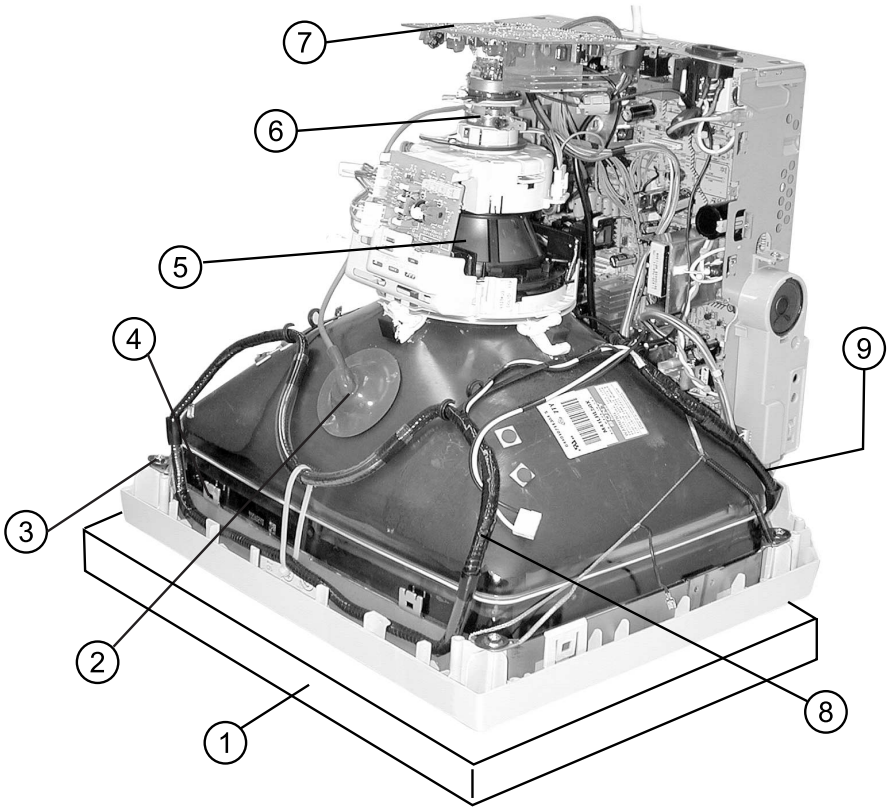

ANODE CAP REMOVAL

WARNING: High voltage remains in the CRT even after the power is disconnected. To avoid electric shock, discharge CRT before attempting to remove the anode cap. After removing the anode cap, short circuit to either the metal chassis, CRT shield, or carbon painted on the CRT.

REMOVAL PROCEDURES

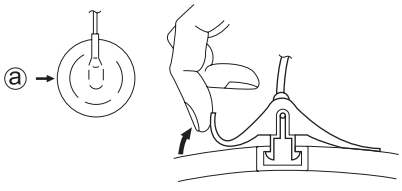

Turn up one side of the rubber cap inthe direction indicated by arrow ⓐ.

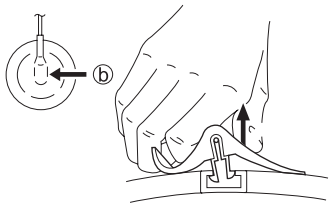

Use your thumb to pull the rubber cap firmly in the direction indicated by arrow ⓑ.

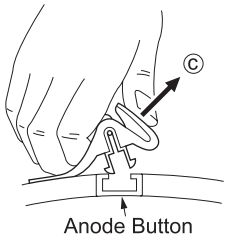

When one side of the rubber cap separates from the anode button, the anode cap can be removed by turning the rubber cap and pulling it in the direction of arrow ⓒ.

HOW TO HANDLE AN ANODE CAP

1. Do not use sharp objects which may cause damage to the surface of the anode cap.
2. To avoid damaging the anode cap, do not squeeze the rubber covering too hard. A material fitting called a shatter-hook terminalis built into the rubber.
3. Do not force turn the foot of the rubber cover. This may cause the shatter-hook terminal to protrude and damage the rubber.

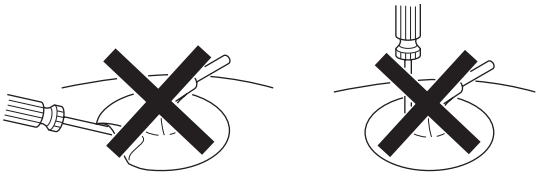

Downloaded from www.Manualslib.com manuals search engine

SECTION 2: SAFETY RELATED ADJUSTMENTS

When replacing parts shown in the table below, the following operational checks must be performed as a safety precaution against X-ray emissions from the unit.

	Part Replaced (⧓)
HV ADJ	RV501

	Part Replaced (◪)	
HV Regulator Circuit	**D board**	T501, IC501, RV501, R540, R541, R542, R544, R564, R567, R568, C532, C534, C539, C553, C554, C555, C556, C558, C561
HV HOLD DOWN Circuit	**D board**	T501, R510, R543, R547, R549, R552, R595, D515, D517, C540, C542, C544, IC607, IC901, C951
Beam Current Protector Circuit	**D board**	T501, R545, R546, R548, R550, R596, R934, C535, C541, IC605, IC607, IC901

※ Allow the unit to warm up for one minute prior to checking the following conditions:

2-1. HV REGULATOR CHECK

1. Input white cross hatch signal. (fH = 80 kHz)
2. CONT maximum and BRT center
3. Cut off Screen VR (G2).
4. Input voltage: 120 ± 2 VAC.
5. Confirm that the voltage is within the voltage range shown below:

Standard voltage: 26.0 $^{+\ 0.3}_{-\ 0.5}$ KV

6. When replacing components identified by ◪ , make sure to recheck the High Voltage.
7. Verify the High Voltage as shown above (26.9 KV $^{+\ 0.3}_{-\ 0.5}$ KV) is within specification. If not, set H. SIZE data at minimum (-127) and then adjust RV501 on "D" board (Adjustment target = 26.0 KV ± 0.2 KV).
8. After adjusting the High Voltage within specification, put the RV cover on RV501 as shown below and apply sufficient amount of RTV around RV501.

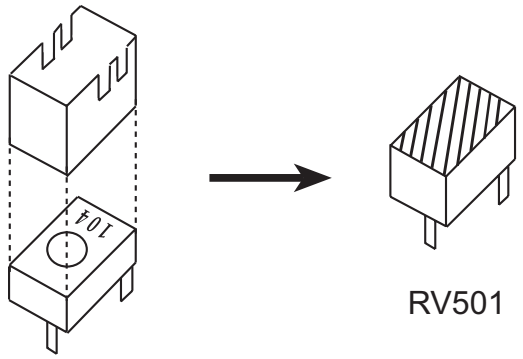

RV501

2-2. HV PROTECTOR CIRCUIT CHECK

1. Confirm that the voltage between cathode of D517 and GND is more than 27.0 VDC.
2. Using an external DC Power supply, apply the voltage shown below between cathode of D517 on "D" and GND, and confirm that the HV Hold-Down circuit works. (Raster disappears) Apply DC Voltage: Less than 35.9 VDC.

Check Condition

- Input voltage: 120 ± 2 VAC
- Input signal: (fH =69 kHz), White Cross Hatch
- Controls: CONT (max) & BRT (center)
- B+ Voltage: 179 ± 3.0 VDC

2-3. BEAM PROTECTOR CHECK (SOFTWARE LOGIC)

1. Using an external current source, apply < 1.55mA between pin (11) of FBT (T501) and GND, and confirm that the raster fades out.

Check Condition

- Input voltage: 120 ± 2 VAC
- Input signal : (fH = 69 kHz), White Cross Hatch
- Controls: CONT (max) & BRT (center)

2-4. B+ VOLTAGE CHECK

1. Input white cross hatch (fH = 69 kHz) signal.
2. CONT (max) & BRT (center).
3. Input voltage: 110 ± 10 VAC.

   Note: Use NF power supply or make sure that distortion factor is 3% or less.
4. Confirm that the voltage is within the range shown below:

   Standard voltage: 179 ± 3.0 VDC

Downloaded from www.Manualslib.com manuals search engine

SECTION 3: ADJUSTMENTS

Connect the communication cable of the connector located on the D board on the monitor. Run the service software and then follow the instructions

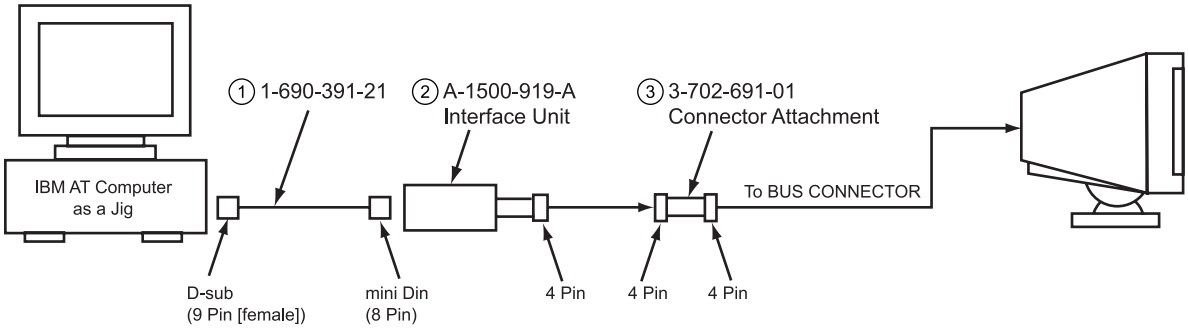

*The parts above (①~③) are necessary for DAS adjustment.

※ Allow a 30 minute warm-up period prior to making the following adjustments:

3-1. LANDING ROUGH ADJUSTMENT

1. Display the all white pattern.
2. Adjust the contrast to maximum value.
3. Display the plain green pattern.
4. Slide the DY back and roughly adjust the plain green pattern with the purity magnet so that it is centered on the screen.
5. Moving the DY forward, adjust so that an entire screen becomes pure green.
6. Adjust the tilt of DY and tighten lightly with a clamp.

3-2. LANDING FINE ADJUSTMENT

1. Place the monitor in the Helmholtz coil.
2. Set TLH plate to zero position.
3. Display plain green pattern.
4. Degauss CRT face and iron parts with degauss equipment or hand-degausser.
5. Perform auto degauss.
6. Attach a wobbling coil to the specified position of CRT neck.
7. Put the sensor of landing checker to CRT face.
8. Adjust purity, DY position and DY tilt.
9. Tighten DY screw.
10. Perform auto degauss.
11. Adjust top and bottom pin by pitching DY up and down with two wedges so that [a] is equal to [b].

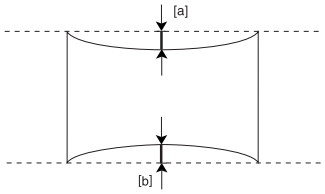

12. If the corner landing is out of specification, use a disk magnet for the landing correction.
13. If disk magnets were used, perform an auto degauss.
14. Remove the wobbling coil and sensor.
15. Fix the purity magnet on DY with white paint.

3-3. CONVERGENCE ROUGH ADJUSTMENT

1. Enter the white crosshatch signal.
2. Roughly adjust the horizontal (H.STAT) and vertical (V.STAT) convergence at four-pole magnet.
3. Roughly adjust HMC and VMC at six-pole magnet.

3-4. CONVERGENCE AND V. KEY (H. TRP) FINE ADJUSTMENT

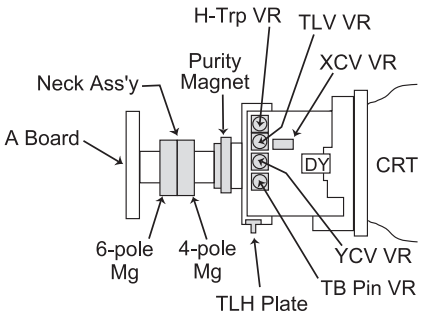

1. Display crosshatch pattern with green lines and black field.
2. Adjust V. Key (=H. Trapezoid) with H-Trp VR so that [a] is equal to [b].

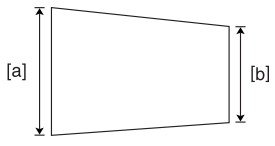

Downloaded from www.Manualslib.com manuals search engine

3. Adjust the TB Pin with TB Pin VR.

TB Pin Movement

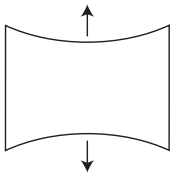

4. Adjust V.SIZE with "VSIZE".
5. Change "CONV_SW" to "0" and "MCR2" to "153".
6. Display crosshatch pattern with red and blue lines and black field.
7. Adjust H.STAT and V.STAT with 4 pole magnet. Use 4 pole magnet, not "HSTAT" and "VSTAT".

4 Pole Magnet

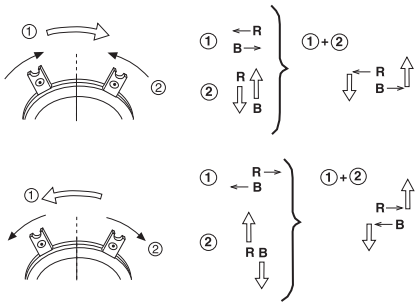

8. Display crosshatch pattern with white lines and black field.
9. Adjust HMC and VMC with 6 pole magnet.

6 Pole Magnet

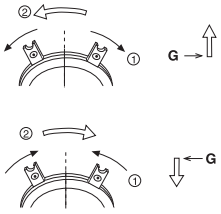

10. Display crosshatch pattern with red and blue lines and black field.
11. If necessary, repeat steps 5-8.
12. Change "CONV_SW" to "6".
13. Adjust H.TILT with TLH plate.

TLH Movement

14. Adjust XCV with XCV VR.

XCV Movement

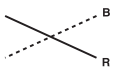

15. Adjust YCH with YCH VR.

YCH Movement

16. Adjust V.TILT with TLV VR.

TLV Movement

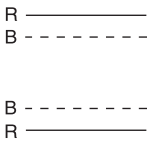

17. If necessary, repeat steps 3-14 to make the optimum condition for the entire screen.
18. Fix 4-pole magnet, 6-pole magnet, TLH plate and XCV VR with white paint.

Zero Position Neck Ass'y

3-5. VERTICAL AND HORIZONTAL POSITION AND SIZE SPECIFICATION

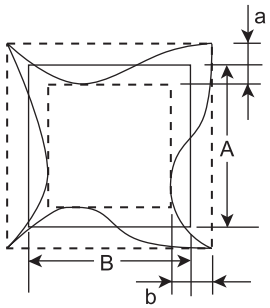

	$f_H \geq 60kHz$	$f_H \leq 60kHz$
a =	2.0 mm	2.4 mm
b =	2.0 mm	2.4 mm

A	B
234	312

3-6. FOCUS ADJUSTMENT

1. Adjust focus (V) and focus (H) for optimum focus.

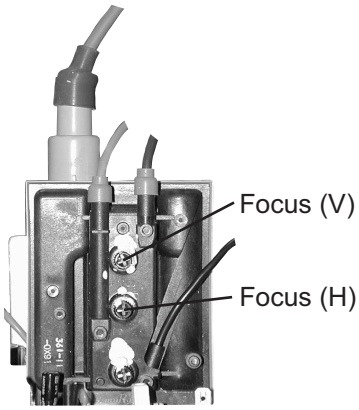

Downloaded from www.Manualslib.com manuals search engine

3-7. DIGITAL CONVERGENCE ADJUSTMENT

Convergence (Low) Mode

1. Adjust the H.STAT and V.STAT with "HSTAT" and "VSTAT".
2. Change "CONV_SW" to "7".

A. Horizontal Convergence

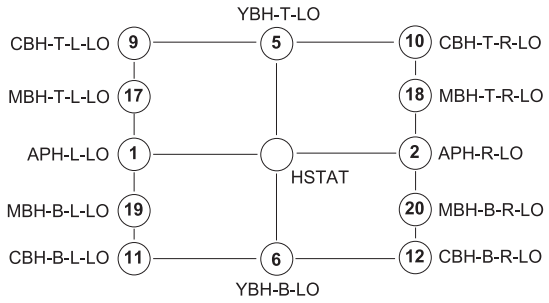

Adjust each misconvergence point in sequence.

B. Vertical Convergence

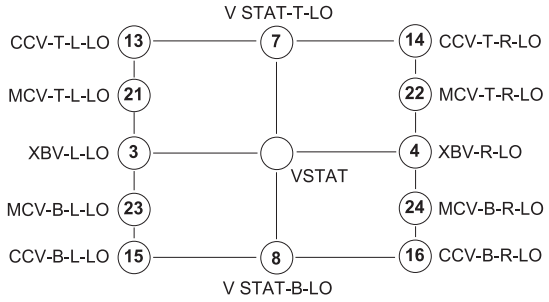

Adjust each misconvergence point in sequence.

2. Repeat the procedure of A and B so that the convergence of the entire screen is within the specification.

Convergence (High) Mode

1. Adjust the H.STAT and V.STAT with "HSTAT-HI" and "VSTAT-HI".

A. Horizontal Convergence

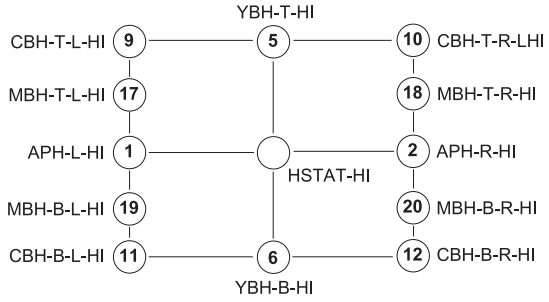

Adjust each misconvergence point in sequence.

B. Vertical Convergence

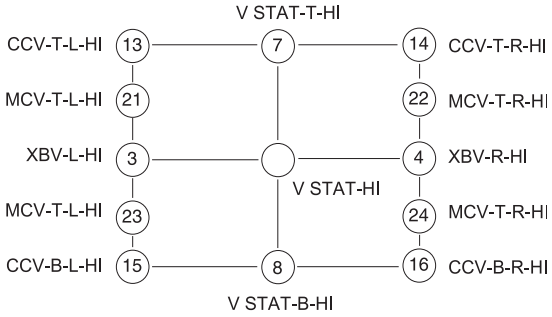

Adjust each misconvergence point in sequence.

2. Repeat the procedure of A and B so that the convergence of the entire screen is within the specification.
3. Change "MCR2" to "170".

3-8. CONVERGENCE SPECIFICATION

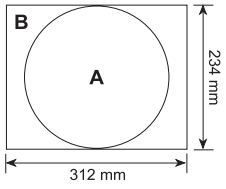

A Zone:

Primary Mode	Others
H: ≤ 0.25mm	H: ≤ 0.3mm
V: ≤ 0.25mm	V: ≤ 0.3mm

B Zone:

Primary Mode	Others
H: ≤ 0.3mm	H: ≤ 0.4mm
V: ≤ 0.3mm	V: ≤ 0.4mm

Downloaded from www.Manualslib.com manuals search engine

SECTION 4: DIAGRAMS

4-1. CIRCUIT BOARDS LOCATION

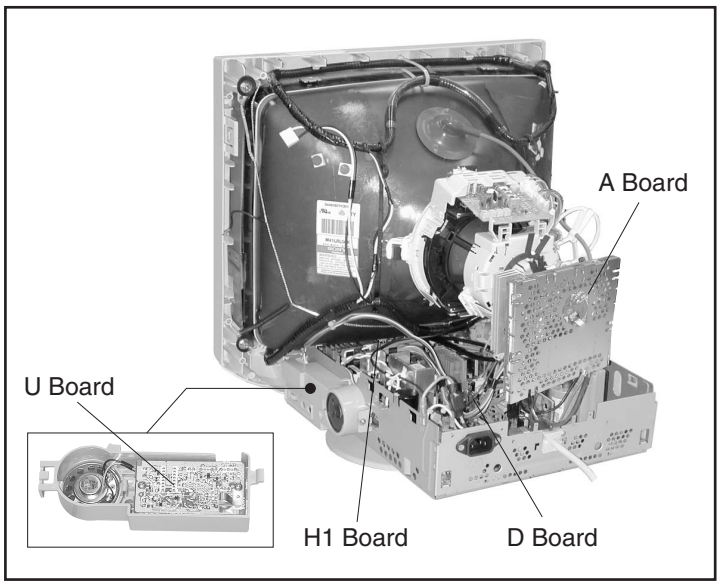

The components identified by shading and ⚠ symbol are critical for safety. Replace only with part number specified.

The symbol ▬ indicates a fast operating fuse and is displayed on the component side of the board. Replace only with fuse of the same rating as marked.

Les composants identifies per un trame et une marque ⚠ sont critiques pour la securite. Ne les remplacer que par une piece portant le numero specifie.

Le symbole ▬ indique une fusible a action rapide. Doit etre remplace par une fusible de meme yaleur, comme maque.

The components identified by ⋈ in this basic schematic diagram have been carefully factory-selected for each set in order to satisfy regulations regarding X-ray radiation. Should replacement be necessary, replace only with the value originally used.

When replacing components identified by ◪, make the necessary adjustments as indicated. If the results do not meet the specified value, change the component identified by ⋈ and repeat the adjustment until the specified value is achieved.

When replacing the parts listed in the table below, it is important to perform the related adjustments.

	Part Replaced (⋈)
HV ADJ	RV501

	Part Replaced (◪)	
HV Regulator Circuit	**D board**	T501, IC501, RV501, R540, R541, R542, R544, R564, R567, R568, C532, C534, C539, C553, C554, C555, C556, C558, C561
HV HOLD DOWN Circuit	**D board**	T501, R510, R543, R547, R549, R552, R595, D515, D517, C540, C542, C544, IC607, IC901, C951
Beam Current Protector Circuit	**D board**	T501, R545, R546, R548, R550, R596, R934, C535, C541, IC605, IC607, IC901

4-2. PRINTED WIRING BOARDS AND SCHEMATIC DIAGRAMS INFORMATION

All capacitors are in µF unless otherwise noted. pF : µµF 50WV or less are not indicated except for electrolytics and tantalums.

All electrolytics are in 50V unless otherwise specified.

All resistors are in ohms. KΩ=1000Ω, MΩ=1000kΩ

Indication of resistance, which does not have one for rating electrical power, is as follows: Pitch : 5mm
Rating electrical power : $^1/_4$W

$^1/_4$W in resistance, $^1/_{10}$W and $^1/_8$W in chip resistance.

: nonflammable resistor.

: fusible resistor.

△ : internal component.

▭ : panel designation and adjustment for repair.

All variable and adjustable resistors have characteristic curve B, unless otherwise noted.

Readings are taken with a color-bar signal input.

Readings are taken with a 10MΩ digital multimeter.

Voltages are DC with respect to ground unless otherwise noted.

Voltage variations may be noted due to normal production tolerances.

All voltages are in V.

S : Measurement impossibillity.

: B+line.

: B-line. (Actual measured value may be different).

: signal path. (RF)

Circled numbers are waveform references.

REFERENCE INFORMATION

RESISTOR
- : RN METAL FILM
- : RC SOLID
- : FPRD NONFLAMMABLE CARBON
- : FUSE NONFLAMMABLE FUSIBLE
- : RW NONFLAMMABLE WIREWOUND
- : RS NONFLAMMABLE METAL OXIDE
- : RB NONFLAMMABLE CEMENT
- : ※ ADJUSTMENT RESISTOR

COIL
- : LF-8L MICRO INDUCTOR

CAPACITOR
- : TA TANTALUM
- : PS STYROL
- : PP POLYPROPYLENE
- : PT MYLAR
- : MPS METALIZED POLYESTER
- : MPP METALIZED POLYPROPYLENE
- : ALB BIPOLAR
- : ALT HIGH TEMPERATURE
- : ALR HIGH RIPPLE

Downloaded from www.Manualslib.com manuals search engine

4-3. DIAGRAMS BLOCK DIAGRAM (1/2)

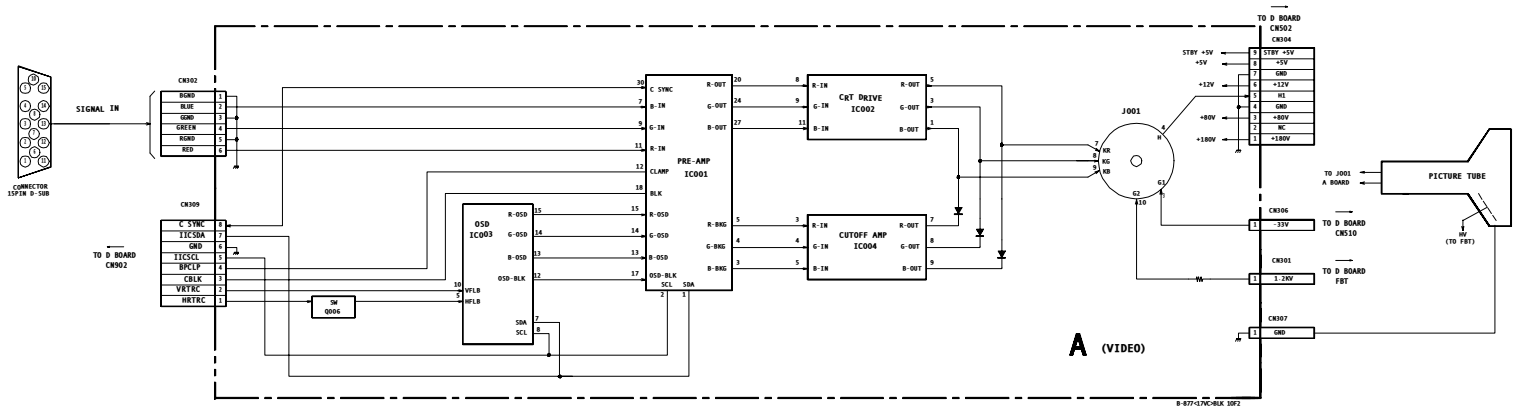

Downloaded from www.Manualslib.com manuals search engine

BLOCK DIAGRAM (2/2)

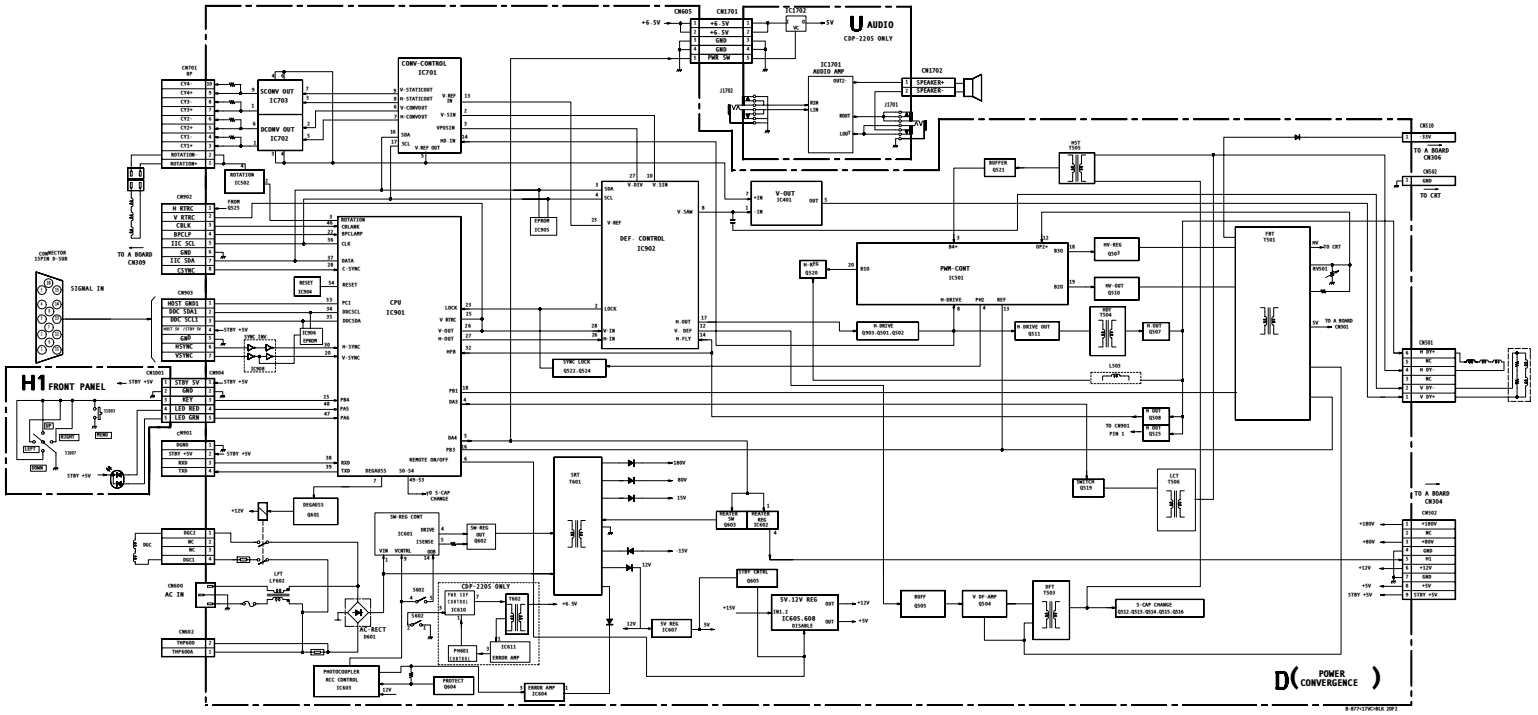

Downloaded from www.Manualslib.com manuals search engine

A BOARD SCHEMATIC DIAGRAM

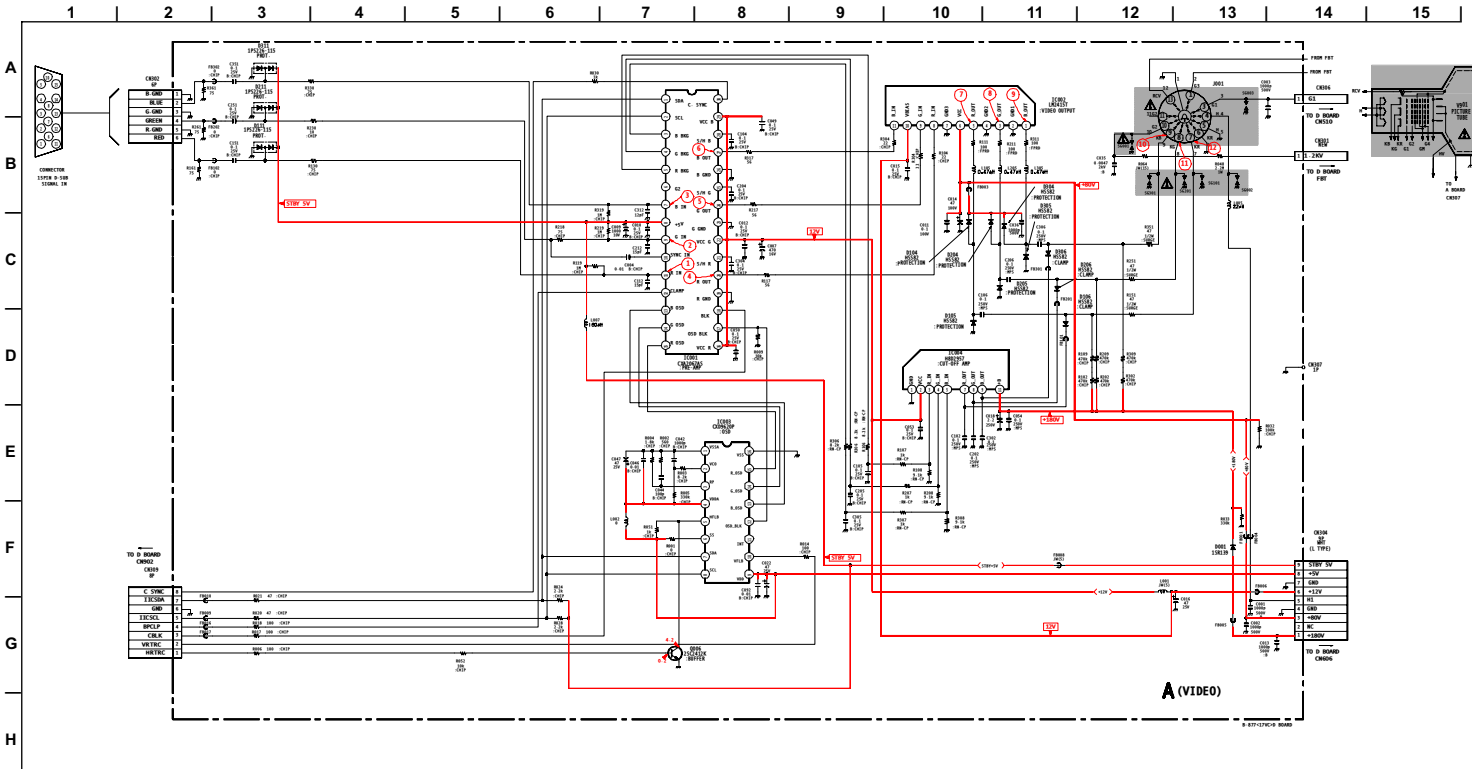

A BOARD IC VOLTAGE LIST

IC001		6	3	13	0	20	2.2	27	2	2	0	9	2	3	1.5	10	0
pin	volt	7	2	14	0	21	3.5	28	3.5	3	54.9	10	11.8	4	5	11	0
1	4	8	4.8	15	0	22	11.9	29	11.9	4	0	11	2	5	3.2	12	0
2	4.6	9	2	16	11.9	23	0	30	2.8	5	54.3	IC003		6	5	13	0
3	2.4	10	3	17	0	24	2.1	IC002		6	78.7	pin	volt	7	4.1	14	0
4	2.6	11	2	18	1.2	25	3.5	pin	volt	7	0	1	0.5	8	5	15	0
5	2.8	12	0.2	19	0	26	0	1	57.4	8	2.1	2	1.5	9	0	16	0

IC004		6	NC
pin	volt	7	99.1
1	0	8	95.6
2	11.9	9	93.2
3	4.8	10	NC
4	4.8	11	179.2

IC005		6	3.2	3	0	10	4.6
pin	volt	7	10.4	4	0.5	11	0
1	11.7	8	11.6	5	4.6	12	0
2	0.7	IC006		6	4.6	13	5
3	1.1	pin	volt	7	0	14	5
4	0	1	5	8	0		
5	3	2	0	9	0		

All voltages are in V.

Downloaded from www.Manualslib.com manuals search engine

A [VIDEO]

COMPONENT SIDE

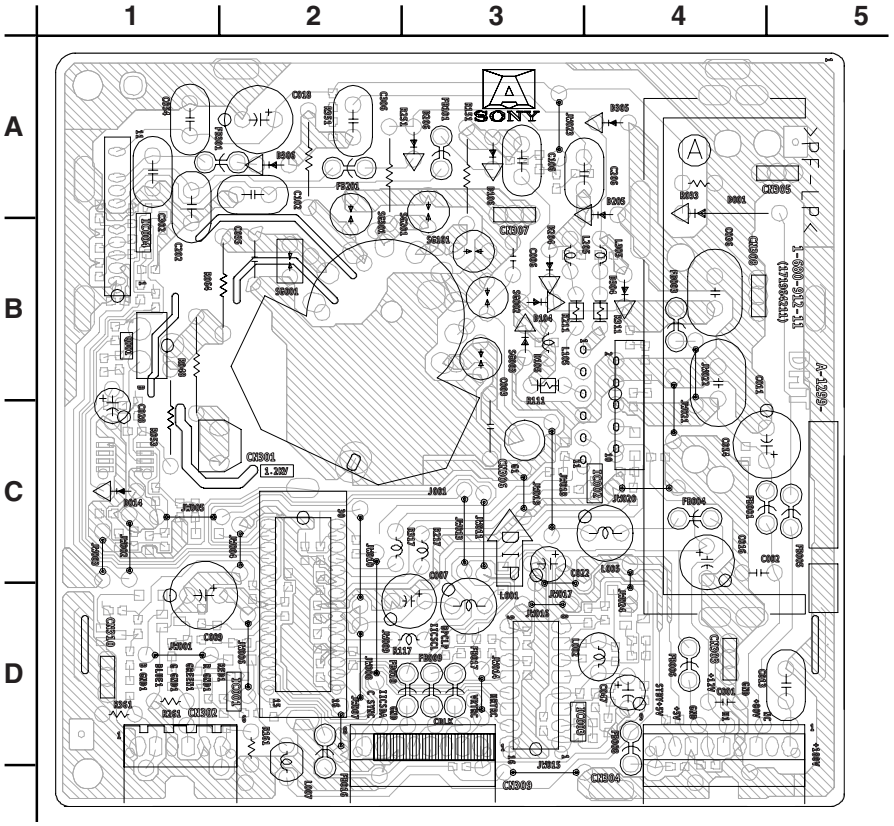

CONDUCTOR SIDE

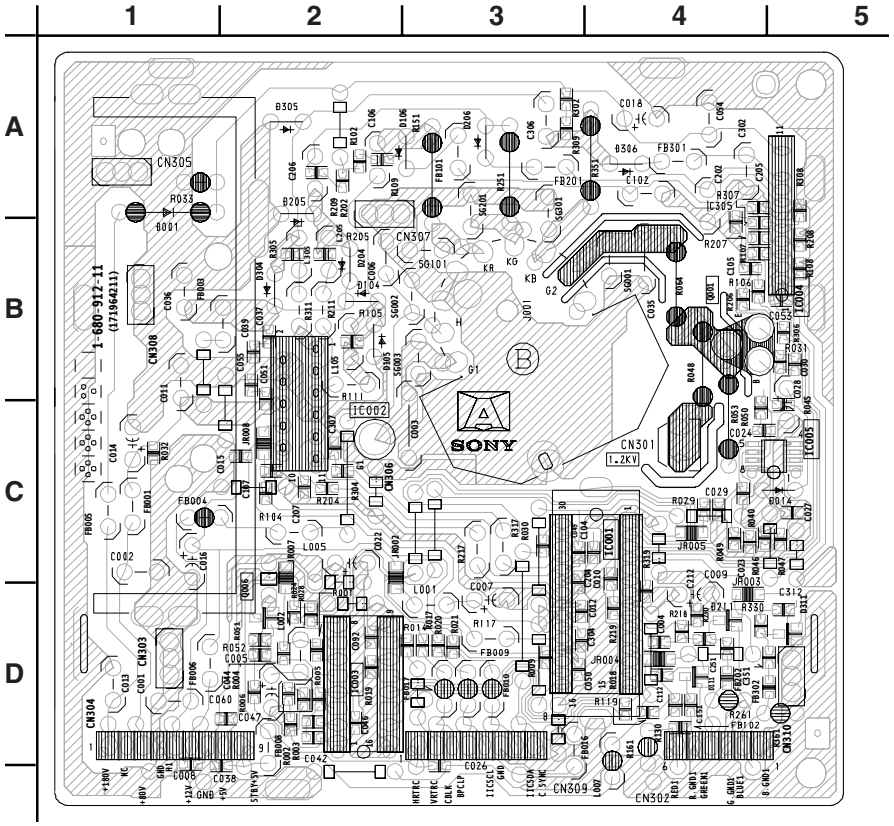

A BOARD WAVEFORMS

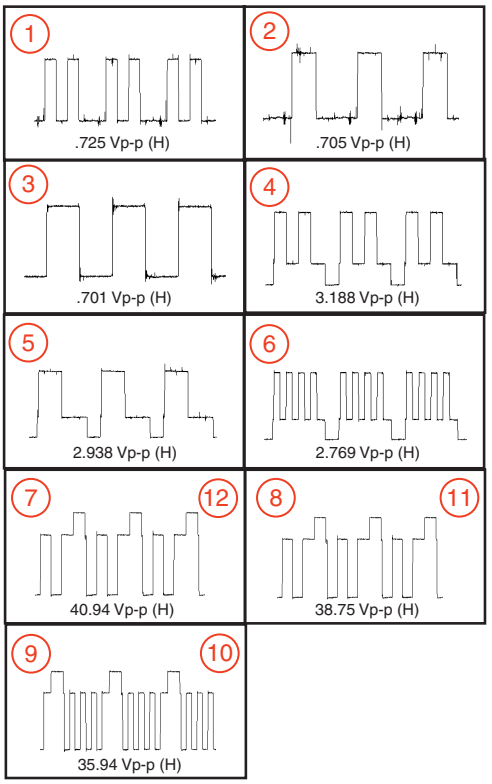

A BOARD LOCATOR LIST

DIODE		
	COMP	COND
D001	A-4	--
D104	B-3	--
D105	B-3	--
D106	A-3	--
D111	--	D-4
D204	B-3	--
D205	A-4	--
D206	A-3	--
D211	--	D-4
D304	B-4	--
D305	A-4	--
D306	A-2	--
D311	--	D-5

IC		
	COMP	COND
IC001	D-2	--
IC002	C-4	--
IC003	D-3	--
IC004	B-1	--

TRANSISTOR		
	COMP	COND
Q006	--	D-2

Downloaded from www.Manualslib.com manuals search engine

D BOARD SCHEMATIC DIAGRAM

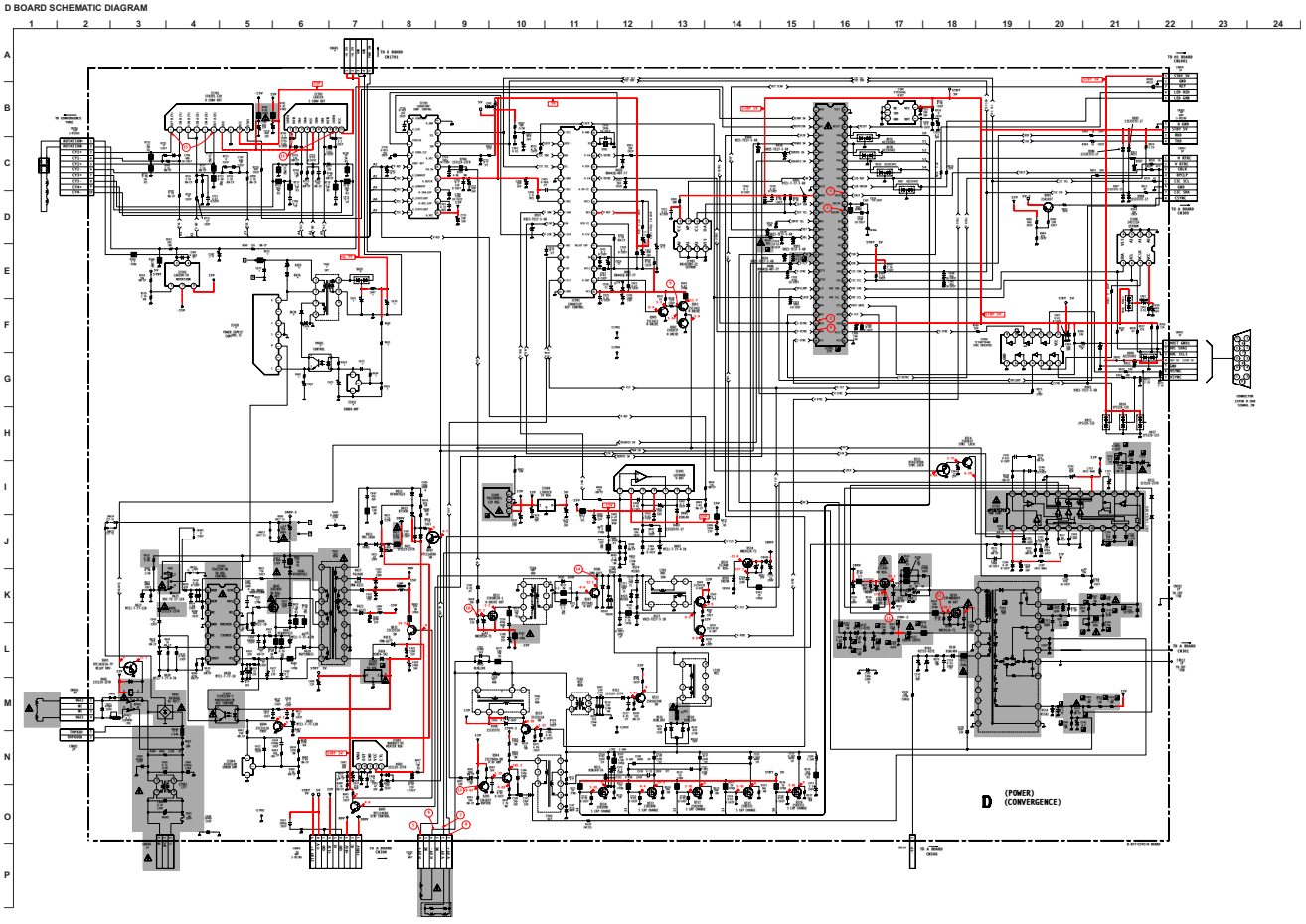

Downloaded from www.Manualslib.com manuals search engine

D [POWER] [CONVERGENCE]

COMPONENT SIDE

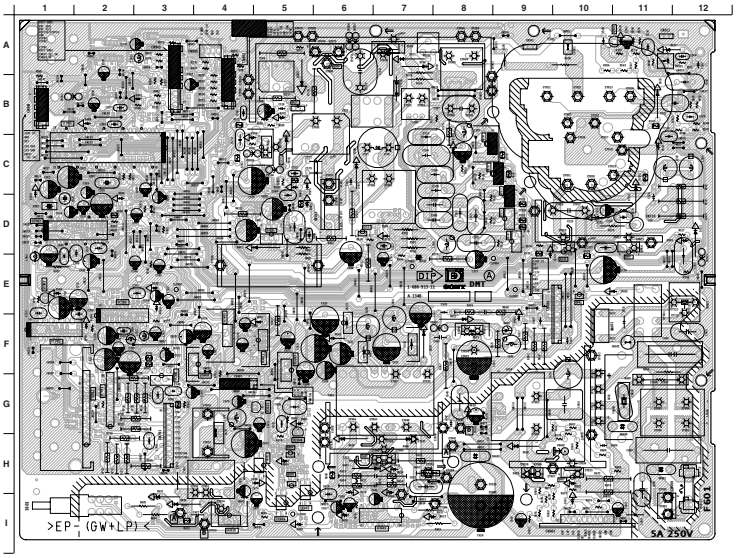

CONDUCTOR SIDE

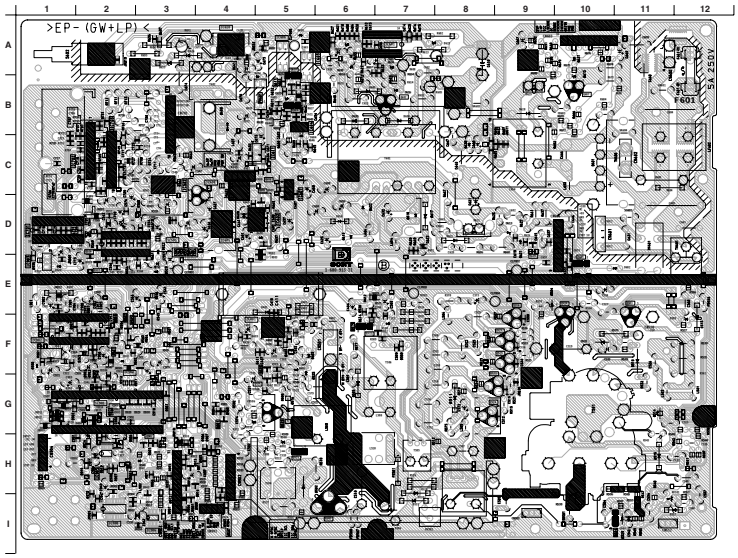

D BOARD LOCATOR LIST

DIODE				COMP	COND		COMP	COND		COMP	COND		COMP	COND		COMP	COND		COMP	COND		COMP	COND
	COMP	COND	D514	C-11	--	D608	H-7	--	D635	I-3	--	D920	D-1	--	IC605	F-4	--	Q504	A-11	--	Q602	--	B-7
D401	D-4	--	D515	B-12	--	D609	I-5	--	D636	I-3	--	D924	--	H-2	IC607	F-5	--	Q505	--	F-3	Q603	--	E-9
D402	D-5	--	D516	C-5	--	D610	I-6	--	D638	H-6	--	D928	--	G-2	IC608	F-4	--	Q507	--	I-6	Q604	--	B-5
D403	--	F-5	D517	A-11	--	D611	F-8	--	D704	F-2	--	D929	--	G-3	IC610	I-4	--	Q508	--	G-5	Q605	--	D-5
D404	B-2	--	D518	C-4	--	D612	F-8	--	D901	--	I-3	D930	--	G-3	IC611	G-5	--	Q510	--	E-10	Q612	H-7	--
D501	B-5	--	D522	E-3	--	D613	F-9	--	D902	--	G-2	D931	--	G-3	IC701	F-1	--	Q511	--	H-5	Q903	--	F-2
D502	A-5	--	D523	E-3	--	D614	F-8	--	D903	D-2	--	D936	--	H-2	IC702	G-2	--	Q512	--	F-9			
D503	D-10	--	D524	C-5	--	D616	H-7	--	D905	--	H-4	D937	--	F-1	IC703	G-2	--	Q513	--	G-9			
D504	E-10	--	D525	C-5	--	D617	F-7	--	D906	--	H-3	D943	--	H-3	IC902	D-1	--	Q514	--	G-8			
D505	C-4	--	D527	C-6	--	D618	F-7	--	D907	--	H-3	IC			IC904	--	F-2	Q515	--	F-9			
D506	A-7	--	D530	A-7	--	D619	F-6	--	D908	--	H-4		COMP	COND	IC905	D-1	--	Q516	--	F-9			
D507	--	I-4	D531	A-7	--	D620	H-6	--	D909	--	I-4	IC401	D-5	--	IC906	--	I-3	Q519	--	F-6			
D508	--	F-10	D601	G-10	--	D621	F-9	--	D911	--	H-4	IC501	E-2	--	IC908	--	I-2	Q520	C-5	--			
D509	D-11	--	D602	E-11	--	D622	F-6	--	D912	--	I-3	IC502	G-3	--	TRANSISTOR			Q521	--	F-6			
D510	D-11	--	D603	F-5	--	D623	I-7	--	D914	--	H-4	IC601	I-7	--		COMP	COND	Q522	--	E-2			
D511	C-8	--	D605	--	B-5	D625	I-7	--	D917	--	H-4	IC602	F-5	--	Q501	--	F-2	Q524	--	D-2			
D512	D-7	--	D606	H-7	--	D633	--	B-4	D918	--	H-2	IC603	I-5	--	Q502	--	F-2	Q525	D-9	--			
D513	D-12	--	D607	--	B-6	D634	H-5	--	D919	--	G-2	IC604	H-5	--	Q503	--	E-11	Q601	--	E-10			

Downloaded from www.Manualslib.com manuals search engine

D BOARD IC VOLTAGE LIST

IC401		5	0.0	2	NC	3	2.5	38	5	27	4.9
pin	volt	6	-65.7	3	0	4	2.5	39	5	28	0
1	1.6	7	-66.1	4	GND	5	-14.8	40	NC	29	0.4
2	14.3	8	-75.1	5	GND	6	2.5	41	NC	30	GND
3	-13.3	9	-74.9	6	NC	7	2.5	42	NC	IC904	
4	-14.4	10	NC	7	88.2	8	0.2	43	NC	pin	volt
5	0.3	11	GND	IC611		9	0.2	44	0.1	1	GND
6	13.8	12	NC	pin	volt	10	14.7	45	2.4	2	GND
7	1.6	13	0	1	2.5	IC901		46	0.5	3	GND
IC501		14	6.1	2	GND	pin	volt	47	0.5	4	5.0
1	12.1	IC602		3	4.5	1	0.1	48	3.7	5	5.0
2	4.7	pin	volt	IC701		2	4.9	49	5	IC905	
3	4	1	3.0	pin	volt	3	2.7	50	0.3	pin	volt
4	6.3	2	8.7	1	4.8	4	1.6	51	5	1	GND
5	8.8	3	GND	2	4.9	5	4.8	52	5	2	GND
6	6.2	4	6.3	3	4.9	6	4.8	53	5	3	GND
7	GND	5	1.2	4	4.8	7	0	54	5	4	GND
8	0.2	IC603		5	4.9	8	NC	55	NC	5	5
9	GND	pin	volt	6	4.9	9	5	56	GND	6	5
10	8.4	1	9.3	7	4.9	10	GND	IC902		7	5
11	4.6	2	8.2	8	4.9	11	5	pin	volt	8	5
12	5.8	3	-73.9	9	4.8	12	5	1	2.2	IC906	
13	5.8	4	-65.3	10	12.1	13	5	2	4.9	pin	volt
14	5.8	IC604		11	4.1	14	0.5	3	4.7	1	GND
15	7.1	pin	volt	12	4.9	15	5	4	4.5	2	GND
16	11.6	1	2.5	13	4.9	16	4.3	5	GND	3	GND
17	12.1	2	GND	14	4.4	17	NC	6	3.9	4	GND
18	8.8	3	6.9	15	1.1	18	4	7	6	5	5
19	9.4	IC605		16	4.7	19	-0.2	8	4.9	6	5
20	8.2	pin	volt	17	4.4	20	0.1	9	4	7	5
21	0	1	14.7	18	GND	21	NC	10	5	8	4.9
22	4.7	2	12.1	IC702		22	0.1	11	6.8	IC908	
23	4	3	GND	pin	volt	23	4.9	12	4.6	pin	volt
24	4	4	4.8	1	-0.1	24	5	13	NC	1	0
IC502		IC607		2	0.0	25	0.0	14	0.4	2	5
pin	volt	pin	volt	3	2.2	26	0	15	GND	3	5
1	1.1	1	5	4	2.2	27	0.4	16	11.7	4	0
2	1.1	2	0	5	2.2	28	0.1	17	0.4	5	GND
3	-14.9	3	GND	6	0.0	29	GND	18	4.9	6	NC
4	-2.8	IC608		7	-14.8	30	0.4	19	10.7	7	GND
5	14.7	pin	volt	8	GND	31	5	20	9.9	8	5
IC601		1	12.1	9	14.7	32	0.4	21	1.5	9	0
pin	volt	2	5	10	3.2	33	0.5	22	10.4	10	0.4
1	77.4	3	GND	IC703		34	5	23	4.9	11	4.7
2	NC	IC610		pin	volt	35	5	24	5.1	12	4.7
3	GND	pin	volt	1	-0.1	36	4.4	25	4	13	0
4	-75.7	1	-71.3	2	0.0	37	4.7	26	0.4	14	5

All voltages are in V

D BOARD WAVEFORMS

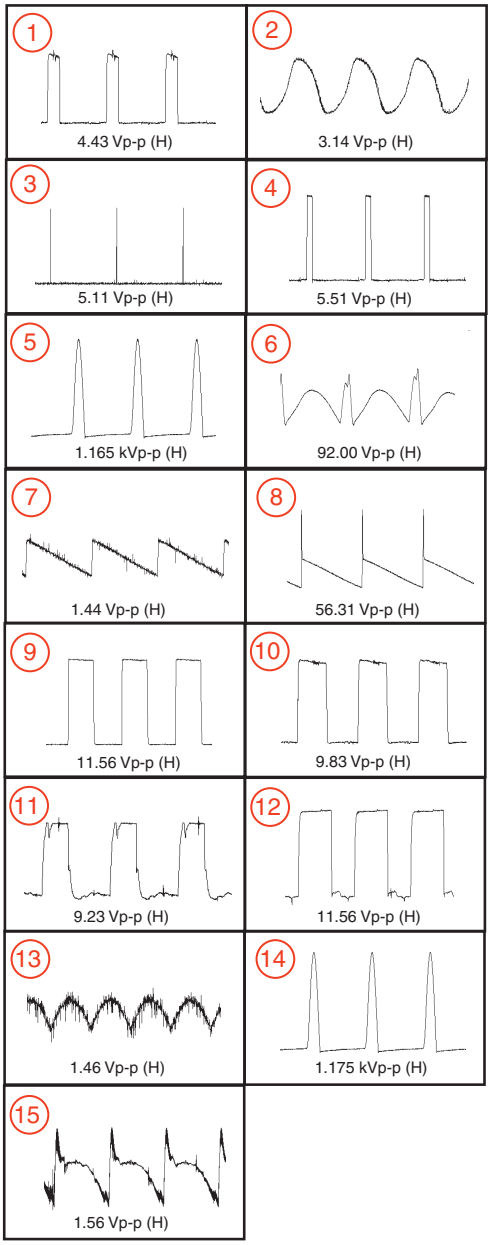

(*) D BOARD VARIANT MODEL LIST

REF. NO.	LOC.	CPD-G220S	CPD-G220R	REF. NO.	LOC.	CPD-G220S	CPD-G220R	REF. NO.	LOC.	CPD-G220S	CPD-G220R
C670	E-7	47µF 25V	#	D633	E-7	D10SC9M	#	R630	F-7	15K	#
C671	G-7	0.1µF	#	D634	F-6	D1NL20U-TR	#	R631	F-7	1K	#
C672	E-7	1000µF	#	D635	E-6	P6KE150AG23	#	R632	G-7	10K	#
C673	G-6	4.7µF	#	D636	E-6	UF4007G23	#	R634	G-7	1K	#
C675	G-6	47µF 10V	#	L607	E-7	4.7µH	#	R639	F-6	1K	#
C676	F-6	10µF	#	PH601	G-6	IC TLP621D4-Y-LF2T	#	R641	G-6	6.8	#
C677	E-5	0.01µF	#	IC610	F-5	TOP233Y	#	R651	E-5	0.47	#
CN605	A-7	5P	#	IC611	G-6	AS431LAN-TR	#	T602	E-6	1-435-767-11	#

#: Not Mounted

Downloaded from www.Manualslib.com manuals search engine

H1 BOARD SCHEMATIC DIAGRAM

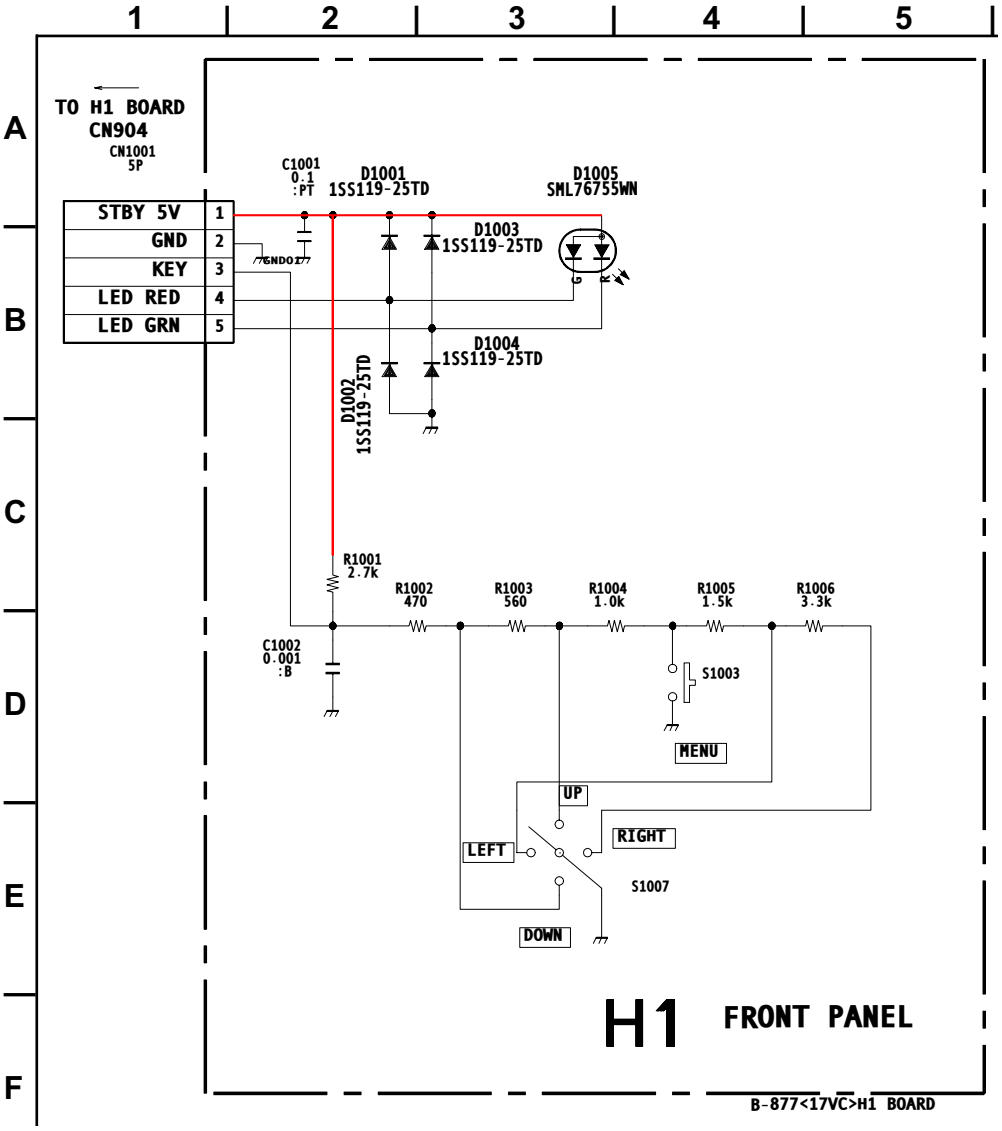

H1 [FRONT PANEL]

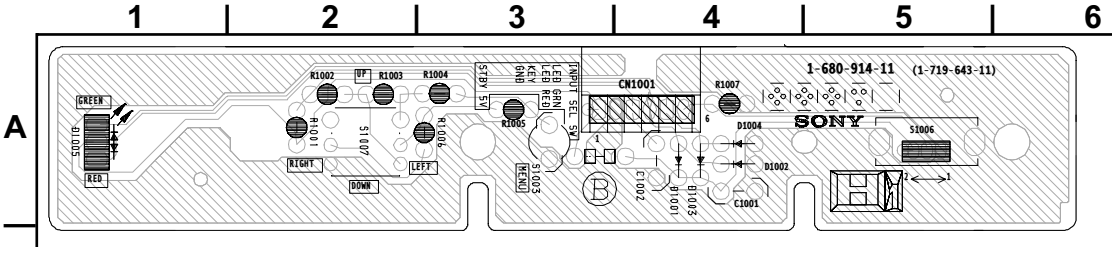

Downloaded from www.Manualslib.com manuals search engine

U BOARD SCHEMATIC DIAGRAM (CPD-G220S Only)

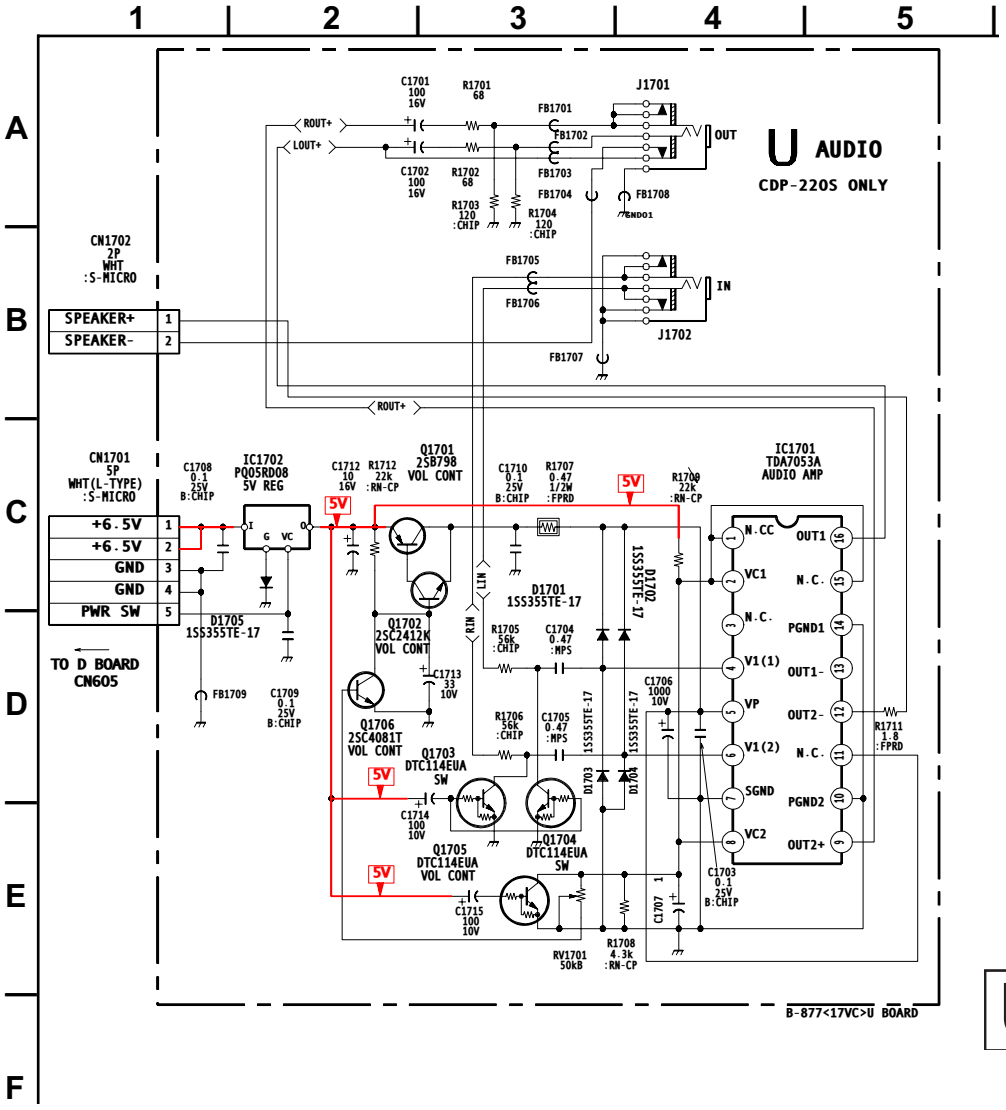

U [AUDIO] (CPD-G220S Only)

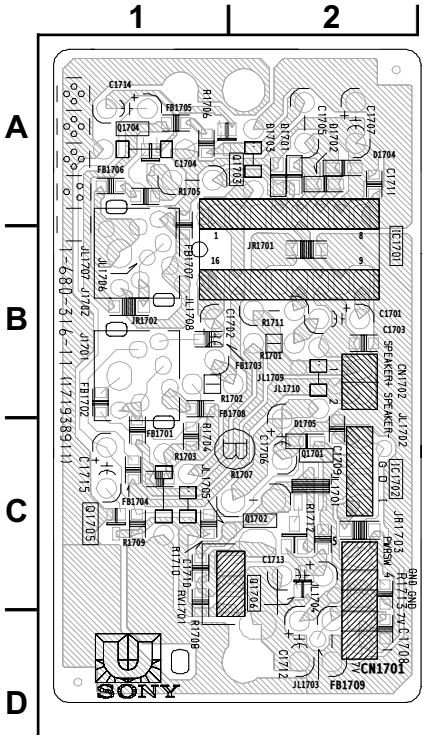

Downloaded from www.Manualslib.com manuals search engine

4-4. SEMICONDUCTORS

2SC2610

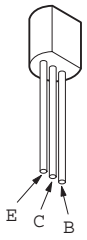

2SA1175-HFE
2SC2785-HFE
DTC114TSA
2SC3311A-QRSTA

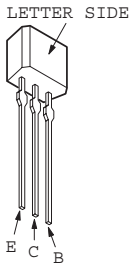

1SS119-25
RD5.1ESB2
RD5.6ESB2
RD18ESB2
RD10ESB2
MTZJ-4.7C
MTZJ-T-77-18
RB441Q-40T-77

DTC143ESA

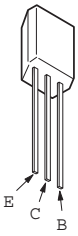

2SK2605LBSONY
2SK3155-01
2SK2098-01MR-F119
2SK2843LBS2SONY
IRFU110A

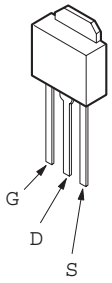

D4SB60L

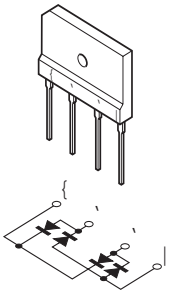

2SC4634LS-CB11

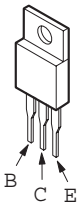

MTZJ-T-77-12B
ERC81-004
EGP10D
RGP10JPKG23
RGP10DG23
RL3Z-LF014-302

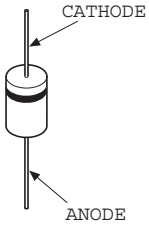

HSS83TD
1SS355TE-17
HSS82

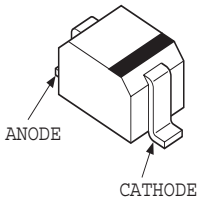

2SC1623-L5L6
2SA1037AK-T146-R
2SC3941A-Q(TA)
DTA114EKA-T146

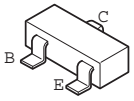

HZU5.6B2TRF
D1NS6
D1NL40-TA2
UF4007G23
RGP02-20EL-6394
ERB91-02

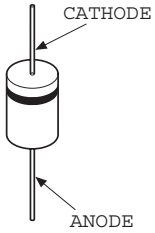

Downloaded from www.Manualslib.com manuals search engine

SECTION 5: EXPLODED VIEWS

Components not identified by a part number or description are not stocked because they are seldom required for routine service.

The component parts of an assembly are indicated by the reference numbers in the far right column of the parts list and within the dotted lines of the diagram.

* Items marked with an asterisk are not stocked since they are seldom required for routine service. Expect some delay when ordering these components.

NOTE: The components identified by shading and ⚠ mark are critical for safety. Replace only with part number specified.

NOTE: Les composants identifies per un trame et une marque ⚠ sont critiques pour la securite. Ne les remplacer que par une piece portant le numero specifie.

5-1. PICTURE TUBE

●	7-685-646-71	SCREW +BVTP 3x8
▲	7-685-663-71	SCREW +BVTP 4x16
■	4-365-808-01	SCREW (5), TAPPING

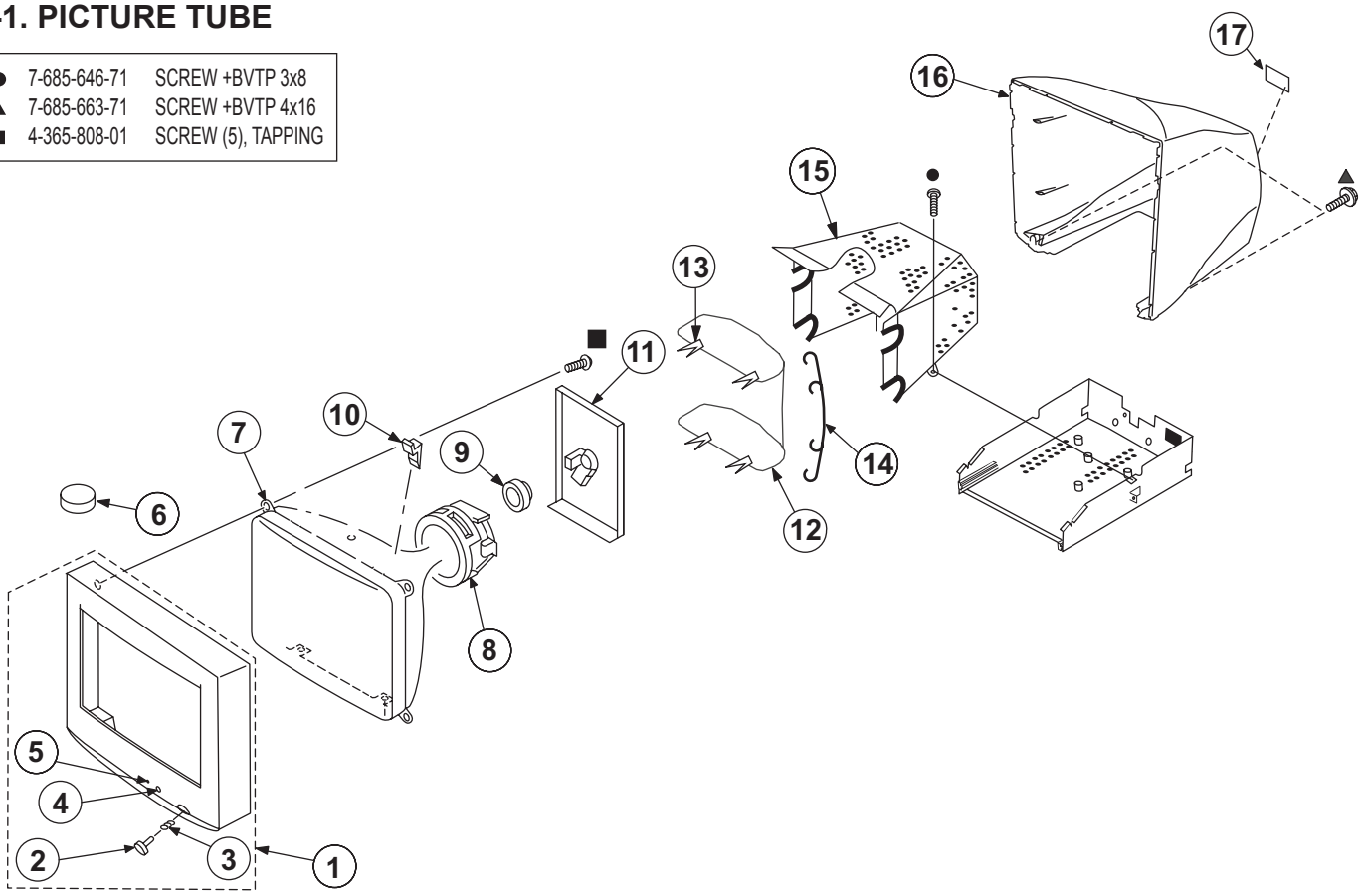

	REF.NO.	PART NO.	DESCRIPTION	[Assembly Includes]
	1	X-4038-525-1	BEZEL ASSY	2-5
	2	4-080-485-01	BUTTON, POWER	
	3	4-081-485-01	SPRING, COMPRESSION	
*	4	4-081-488-01	JOYSTICK	
	5	4-080-487-01	BUTTON, MENU	
	6	1-452-032-00	MAGNET,DISC	
⚠	7	8-738-557-05	CRT 17TKB(SDP)(FILM INTENSITY)	
⚠	8	8-451-522-11	DY Y17TKJ3-Y	
⚠	9	1-452-923-41	NECK ASSEMBLY (NA-2915)	
	10	4-040-897-01	SPACER, DY	

	REF.NO.	PART NO.	DESCRIPTION
*	11	A-1299-430-A	A COMPLETE PC BOARD
⚠	12	1-419-092-21	COIL, DEGAUSSING
	13	4-045-123-21	HOLDER, DEGAUSSING COIL
*	14	4-080-810-21	BAND, DEGAUSS COIL
	15	X-4038-714-1	SHIELD ASSY, EMI
*	16	4-080-492-01	CABINET (CPD-G220S ONLY)
	16	4-080-492-21	CABINET (CPD-G220R ONLY)
*	17	4-081-482-11	LABEL, INFORMATION (CPD-G220R ONLY)
*	17	4-081-482-01	LABEL, INFORMATION (CPD-G220S ONLY)

Downloaded from www.Manualslib.com manuals search engine

NOTE: The components identified by shading and ⚠ mark are critical for safety. Replace only with part number specified.

NOTE: Les composants identifies per un trame et une marque ⚠ sont critiques pour la securite. Ne les remplacer que par une piece portant le numero specifie.

5-2. CHASSIS

●	7-685-872-01	SCREW +BVTT 3x8
★	7-685-881-09	SCREW +BVTP 4x8
■	7-685-646-71	SCREW +BVTP 3x8
▲	7-685-881-01	SCREW +BVTT 4x8
□	4-052-345-01	SCREW, (3x8) (+K) TAPPING

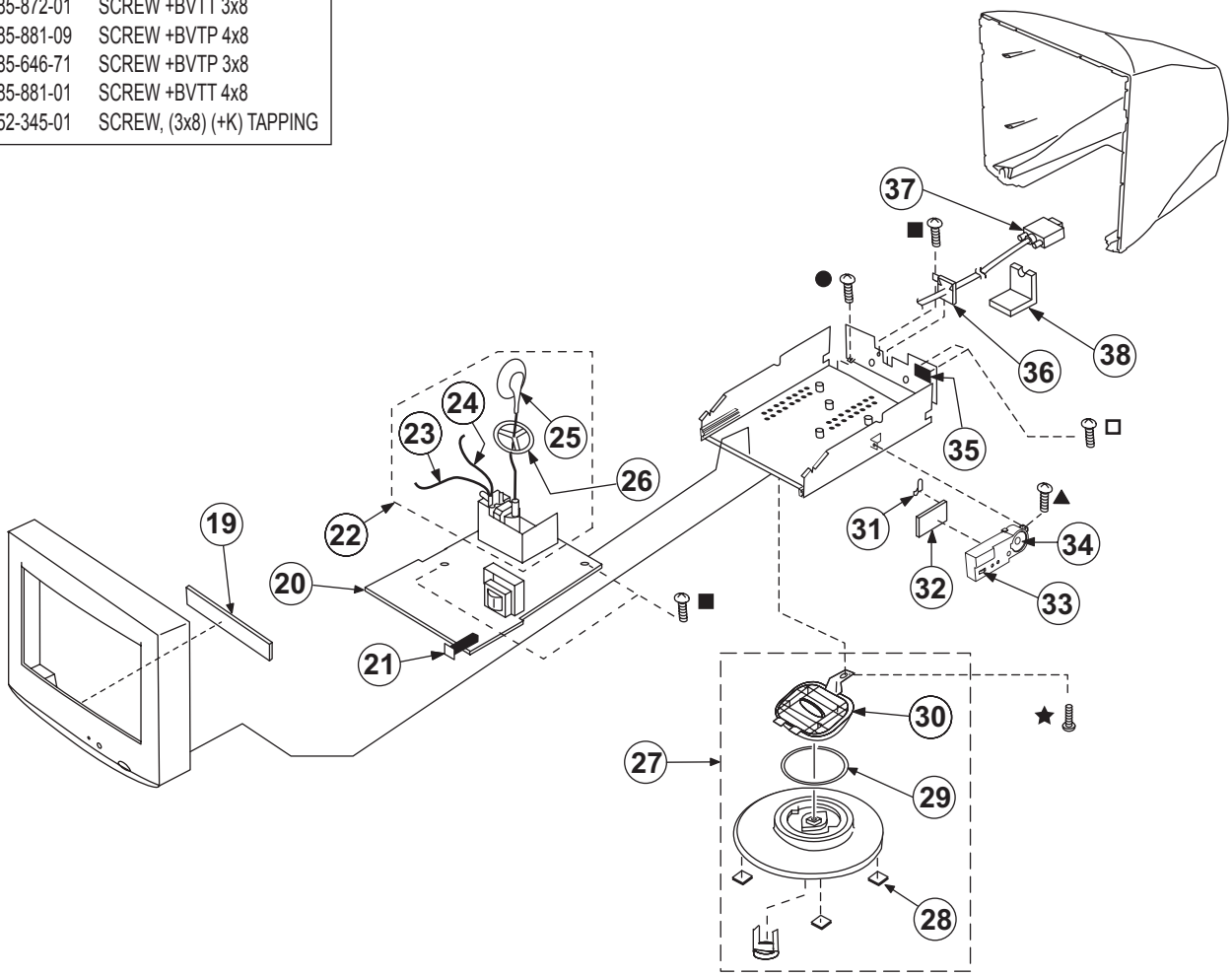

	REF.NO.	PART NO.	DESCRIPTION	[Assembly Includes]
*	19	A-1372-935-A	H1 MOUNTED PC BOARD	
*	20	A-1348-061-A	D COMPLETE PC BOARD (CPD-G220R ONLY)	
*	20	A-1348-040-A	D COMPLETE PC BOARD (CPD-G220S ONLY)	
	21	4-080-245-01	CAP, POWER	
⚠	22	1-453-365-11	FBT ASSY (NX-4405/VQL4)	23-25
	23	1-900-805-62	CONNECTOR ASSY, HV	
	24	1-900-805-55	WIRE ASSY, FOCUS LEAD	
	25	1-251-643-22	CAP ASSY, HIGH-VOLTAGE	
	26	3-704-372-31	HOLDER, HV CABLE	
	27	X-4038-526-1	BASE ASSY, STAND	28-30
*	28	4-060-533-01	CUSHION	
	29	4-080-491-01	RING, TILT	
	30	4-080-489-01	SLIDER	

	REF.NO.	PART NO.	DESCRIPTION
*	31	4-081-491-01	SPRING, U (CPD-G220S ONLY)
*	32	A-1373-853-A	U MOUNTED PC BOARD (CPD-G220S ONLY)
*	33	4-080-617-01	DIAL, VOLUME (CPD-G220S ONLY)
	34	1-505-701-11	SPEAKER (4.5CM) (CPD-G220S ONLY)
	35	1-815-380-11	INLET, AC
*	36	4-081-651-01	HOLDER, CABLE
	37	1-757-472-11	CABLE, VIDEO (SINGLE INPUT)
	38	4-080-253-01	COVER, PIGTAIL

Downloaded from www.Manualslib.com manuals search engine

NOTE: The components identified by shading and ⚠ mark are critical for safety. Replace only with part number specified.

NOTE: Les composants identifies per un trame et une marque ⚠ sont critiques pour la securite. Ne les remplacer que par une piece portant le numero specifie.

5-3. PACKING MATERIALS

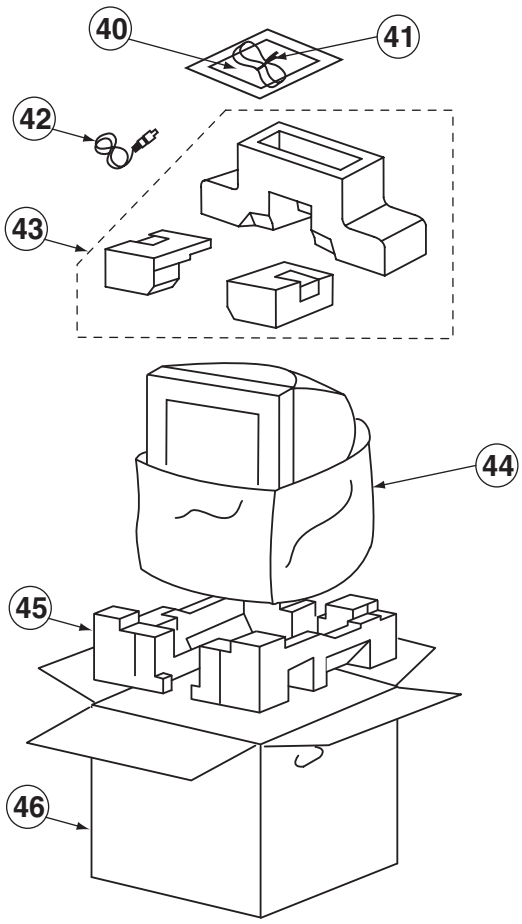

	REF.NO.	PART NO.	DESCRIPTION
	40	4-081-489-11	MANUAL, INSTRUCTION
⚠	41	1-790-881-11	CORD SET, POWER
	42	1-790-881-11	CORD, CONNECTION (CPD-G220S Only)
*	43	4-080-545-01	CUSHION ASSY, UPPER
	44	4-041-927-11	BAG, PROTECTION
*	45	4-080-542-01	CUSHION ASSY, LOWER
*	46	4-080-541-01	CARTON, INDIVIDUAL (CPD-G220S Only)
*	46	4-080-541-11	CARTON, INDIVIDUAL (CPD-G220R Only)

Downloaded from www.Manualslib.com manuals search engine

SECTION 6: ELECTRICAL PARTS LIST

NOTE: The components identified by shading and ⚠ mark are critical for safety. Replace only with part number specified.

NOTE: Les composants identifies per un trame et une marque ⚠ sont critiques pour la securite. Ne les remplacer que par une piece portant le numero specifie.

The components in this manual identified by the following symbol: ⋈ indicate parts that have been carefully factory-selected to satisfy regulations regarding X-ray radiation for each set.

Should replacement be required for one of these components, replace only with the value originally used.

* Items marked with an asterisk are not stocked since they are seldom required for routine service. Expect some delay when ordering these components.

A

RESISTORS
- All resistors are in ohms
- F : nonflammable
- All variable and adjustable resistors have characteristic curve B, unless otherwise noted.

When ordering parts by reference number, please include the board name.

REF.NO.	PART NO.	DESCRIPTION	VALUES		
A					
	* A-1299-430-A	A BOARD, COMPLETE			
	4-382-854-01	SCREW (M3X8), P, SW (+)			
	CAPACITOR				
C001	1-162-318-11	CERAMIC	0.001µF	10%	500V
C002	1-162-318-11	CERAMIC	0.001µF	10%	500V
C003	1-102-050-00	CERAMIC	0.01µF	20%	500V
C004	1-163-021-91	CERAMIC CHIP	0.01µF	10%	50V
C007	1-126-935-11	ELECT	470µF	20%	16V
C009	1-126-926-11	ELECT	1000µF	20%	10V
C010	1-164-004-11	CERAMIC CHIP	0.1µF	10%	25V
C011	1-130-777-00	MYLAR	0.1µF	10%	100V
C012	1-164-004-11	CERAMIC CHIP	0.1µF	10%	25V
C013	1-162-318-11	CERAMIC	0.001µF	10%	500V
C014	1-128-562-11	ELECT	47µF	20%	100V
C015	1-164-004-11	CERAMIC CHIP	0.1µF	10%	25V
C016	1-104-664-11	ELECT	47µF	20%	25V
C018	1-107-649-11	ELECT	2.2µF	20%	250V
C022	1-104-664-11	ELECT	47µF	20%	25V
C035	1-162-114-00	CERAMIC	.0047µF	2KV	
C036	1-162-318-11	CERAMIC	0.001µF	10%	500V
C042	1-163-009-11	CERAMIC CHIP	0.001µF	10%	50V
C044	1-163-251-11	CERAMIC CHIP	100pF	5%	50V
C046	1-163-021-91	CERAMIC CHIP	0.01µF	10%	50V
C047	1-104-664-11	ELECT	47µF	20%	25V
C049	1-164-004-11	CERAMIC CHIP	0.1µF	10%	25V
C050	1-164-004-11	CERAMIC CHIP	0.1µF	10%	25V
C053	1-164-004-11	CERAMIC CHIP	0.1µF	10%	25V
C054	1-137-528-11	MYLAR	0.1µF	10%	250V
C092	1-163-021-91	CERAMIC CHIP	0.01µF	10%	50V
C102	1-137-528-11	MYLAR	0.1µF	10%	250V
C104	1-164-004-11	CERAMIC CHIP	0.1µF	10%	25V
C105	1-164-004-11	CERAMIC CHIP	0.1µF	10%	25V
C106	1-137-528-11	MYLAR	0.1µF	10%	250V
C112	1-163-231-11	CERAMIC CHIP	15pF	5%	50V
C151	1-164-004-11	CERAMIC CHIP	0.1µF	10%	25V
C202	1-137-528-11	MYLAR	0.1µF	10%	250V
C204	1-164-004-11	CERAMIC CHIP	0.1µF	10%	25V
C205	1-164-004-11	CERAMIC CHIP	0.1µF	10%	25V
C206	1-137-528-11	MYLAR	0.1µF	10%	250V
C212	1-163-231-11	CERAMIC CHIP	15pF	5%	50V
C251	1-164-004-11	CERAMIC CHIP	0.1µF	10%	25V
C302	1-137-528-11	MYLAR	0.1µF	10%	250V
C304	1-164-004-11	CERAMIC CHIP	0.1µF	10%	25V
C305	1-164-004-11	CERAMIC CHIP	0.1µF	10%	25V
C306	1-137-528-11	MYLAR	0.1µF	10%	250V
C312	1-163-229-11	CERAMIC CHIP	12pF	5%	50V
C351	1-164-004-11	CERAMIC CHIP	0.1µF	10%	25V
	CONNECTOR				
CN301	1-785-879-11	CONNECTOR, ONE TOUCH			
* CN302	1-815-022-11	PIN,CONNECTOR (WITH PWB) 6P			
* CN304	1-564-524-11	PLUG,CONNECTOR 9P			
CN306	1-506-108-41	PIN,CONNECTOR (TERMINAL PIN)			
CN307	1-695-915-11	TAB (CONTACT)			
* CN309	1-564-523-11	PLUG,CONNECTOR 8P			
	DIODE				
D001	8-719-970-02	DIODE 1SR139-400T31			
D104	8-719-970-83	DIODE HSS82-TJ			
D105	8-719-970-83	DIODE HSS82-TJ			
D106	8-719-970-83	DIODE HSS82-TJ			
D111	8-719-062-51	DIODE 1PS226-115			
D204	8-719-970-83	DIODE HSS82-TJ			
D205	8-719-970-83	DIODE HSS82-TJ			
D206	8-719-970-83	DIODE HSS82-TJ			
D211	8-719-062-51	DIODE 1PS226-115			
D304	8-719-970-83	DIODE HSS82-TJ			
D305	8-719-970-83	DIODE HSS82-TJ			
D306	8-719-970-83	DIODE HSS82-TJ			
D311	8-719-062-51	DIODE 1PS226-115			

Downloaded from www.Manualslib.com manuals search engine

NOTE: The components identified by shading and ⚠ mark are critical for safety. Replace only with part number specified.

NOTE: Les composants identifies per un trame et une marque ⚠ sont critiques pour la securite. Ne les remplacer que par une piece portant le numero specifie.

A

REF.NO.	PART NO.	DESCRIPTION	VALUES		
	FERRITE BEAD				
FB001	1-412-911-11	FERRITE	0µH		
FB003	1-412-911-11	FERRITE	0µH		
FB004	1-412-911-11	FERRITE	0µH		
FB005	1-412-911-11	FERRITE	0µH		
FB006	1-412-911-11	FERRITE	0µH		
FB009	1-412-911-11	FERRITE	0µH		
FB010	1-412-911-11	FERRITE	0µH		
FB101	1-412-911-11	FERRITE	0µH		
FB102	1-216-295-11	SHORT			
FB201	1-412-911-11	FERRITE	0µH		
FB202	1-216-295-11	SHORT			
FB301	1-412-911-11	FERRITE	0µH		
FB302	1-216-295-11	SHORT			
	IC				
IC001	8-752-094-09	IC CXA2067AS			
IC002	8-759-596-65	IC LM2415T			
IC003	8-759-698-56	IC CXD9620P			
IC004	8-749-016-27	IC H8D2957			
	JACK				
⚠ J001	1-451-524-11	SOCKET, CRT			
	CHIP CONDUCTOR				
JR002	1-216-296-11	SHORT			
JR003	1-216-296-11	SHORT			
JR004	1-216-296-11	SHORT			
JR005	1-216-296-11	SHORT			
JR007	1-216-296-11	SHORT			
JR008	1-216-296-11	SHORT			
	COIL				
L002	1-412-911-11	FERRITE	0µH		
L005	1-400-054-21	INDUCTOR	22µH		
L007	1-408-617-31	INDUCTOR	180µH		
L105	1-410-750-41	INDUCTOR	0.47µH		
L205	1-410-750-41	INDUCTOR	0.47µH		
L305	1-410-750-41	INDUCTOR	0.47µH		
	TRANSISTOR				
Q006	8-729-120-28	TRANSISTOR 2SC2412K-T-146-QR			
	RESISTOR				
R001	1-216-295-11	SHORT			
R002	1-216-043-91	RES-CHIP	560	5%	1/10W
R003	1-216-071-00	RES-CHIP	8.2K	5%	1/10W
R004	1-216-055-00	RES-CHIP	1.8K	5%	1/10W
R005	1-216-109-00	RES-CHIP	330K	5%	1/10W
R006	1-216-025-11	RES-CHIP	100	5%	1/10W
R009	1-216-073-00	RES-CHIP	10K	5%	1/10W
R014	1-216-025-11	RES-CHIP	100	5%	1/10W
R017	1-216-025-11	RES-CHIP	100	5%	1/10W
R018	1-216-025-11	RES-CHIP	100	5%	1/10W
R020	1-216-017-91	RES-CHIP	47	5%	1/10W
R021	1-216-017-91	RES-CHIP	47	5%	1/10W
R024	1-216-057-00	RES-CHIP	2.2K	5%	1/10W
R028	1-216-057-00	RES-CHIP	2.2K	5%	1/10W
R030	1-216-049-11	RES-CHIP	1K	5%	1/10W
R032	1-216-097-11	RES-CHIP	100K	5%	1/10W
R033	1-247-891-00	CARBON	330K	5%	1/4W
R048	1-219-398-51	METAL	2.2M	5%	1W
R051	1-216-049-11	RES-CHIP	1K	5%	1/10W
R052	1-216-073-00	RES-CHIP	10K	5%	1/10W
R102	1-216-113-00	RES-CHIP	470K	5%	1/10W
R104	1-216-009-91	RES-CHIP	22	5%	1/10W
R106	1-216-673-11	METAL CHIP	8.2K	0.50%	1/10W
R107	1-216-651-11	METAL CHIP	1K	0.50%	1/10W
R108	1-216-674-11	METAL CHIP	9.1K	0.50%	1/10W
R109	1-216-113-00	RES-CHIP	470K	5%	1/10W
R111	1-249-405-11	CARBON	100	5%	1/4W
R117	1-249-402-11	CARBON	56	5%	1/4W
R119	1-216-121-11	RES-CHIP	1M	5%	1/10W
R130	1-216-022-00	RES-CHIP	75	5%	1/10W
R151	1-219-742-11	CARBON	47	5%	1/2W
R161	1-215-394-00	METAL	75	1%	1/4W
R202	1-216-113-00	RES-CHIP	470K	5%	1/10W
R204	1-216-009-91	RES-CHIP	22	5%	1/10W
R206	1-216-673-11	METAL CHIP	8.2K	0.50%	1/10W
R207	1-216-651-11	METAL CHIP	1K	0.50%	1/10W
R208	1-216-674-11	METAL CHIP	9.1K	0.50%	1/10W
R209	1-216-113-00	RES-CHIP	470K	5%	1/10W
R211	1-249-405-11	CARBON	100	5%	1/4W
R217	1-249-402-11	CARBON	56	5%	1/4W
R218	1-216-022-00	RES-CHIP	75	5%	1/10W
R219	1-216-121-11	RES-CHIP	1M	5%	1/10W
R230	1-216-001-00	RES-CHIP	10	5%	1/10W
R251	1-219-742-11	CARBON	47	5%	1/2W
R261	1-215-394-00	METAL	75	1%	1/4W
R302	1-216-113-00	RES-CHIP	470K	5%	1/10W
R304	1-216-009-91	RES-CHIP	22	5%	1/10W
R306	1-216-673-11	METAL CHIP	8.2K	0.50%	1/10W
R307	1-216-651-11	METAL CHIP	1K	0.50%	1/10W
R308	1-216-674-11	METAL CHIP	9.1K	0.50%	1/10W
R309	1-216-113-00	RES-CHIP	470K	5%	1/10W
R311	1-249-405-11	CARBON	100	5%	1/4W

Downloaded from www.Manualslib.com manuals search engine

NOTE: The components identified by shading and ⚠ mark are critical for safety. Replace only with part number specified.

NOTE: Les composants identifies per un trame et une marque ⚠ sont critiques pour la securite. Ne les remplacer que par une piece portant le numero specifie.

A D

REF.NO.	PART NO.	DESCRIPTION	VALUES		
R317	1-249-402-11	CARBON	56	5%	1/4W
R319	1-216-121-11	RES-CHIP	1M	5%	1/10W
R330	1-216-022-00	RES-CHIP	75	5%	1/10W
R351	1-219-742-11	CARBON	47	5%	1/2W
R361	1-215-394-00	METAL	75	1%	1/4W
	SPARK GAP				
⚠ SG001	1-519-422-11	GAP, SPARK			
⚠ SG002	1-517-499-21	GAP, SPARK			
⚠ SG003	1-517-499-21	GAP, SPARK			
⚠ SG101	1-517-499-21	GAP, SPARK			
⚠ SG201	1-517-499-21	GAP, SPARK			
⚠ SG301	1-517-499-21	GAP, SPARK			

D

*** A-1348-040-A D BOARD, COMPLETE (CPD-G220S ONLY)**

*** A-1348-061-A D COMPLETE PC BOARD (CPD-G220R ONLY)**

The high-voltage leads associated with the FBT on the D board are not included and must be ordered separately. Order the following 3 leads when requesting this board:

1-900-805-62	CONNECTOR ASSY, HV
1-900-805-55	WIRE ASSY, FOCUS LEAD
1-251-643-22	CAP ASSY, HIGH-VOLTAGE
2-371-561-00	BUSHING (P), INSULATING
4-060-555-01	SHEET, INSULATOR
4-081-496-01	HOLDER, IC
4-382-854-01	SCREW (M3X8), P, SW (+)
4-382-854-11	SCREW (M3X10), P, SW (+)
* 7-322-065-48	RUBBER, SILICONE RTV (KE-3490)

CAPACITOR

C401	1-126-942-61	ELECT	1000µF	20%	25V
C402	1-137-959-51	MYLAR	0.47µF	5%	100V
C403	1-128-749-91	ELECT	220µF	20%	50V
C404	1-126-942-61	ELECT	1000µF	20%	25V
C405	1-104-760-11	CERAMIC CHIP	0.047µF	10%	50V
C406	1-130-481-00	MYLAR	0.0068µF	5%	50V
C407	1-164-004-11	CERAMIC CHIP	0.1µF	10%	25V
C408	1-163-021-91	CERAMIC CHIP	0.01µF	10%	50V
C410	1-164-005-11	CERAMIC CHIP	0.47µF		25V
C501	1-126-964-11	ELECT	10µF	20%	50V
C502	1-137-150-11	MYLAR	0.01µF	5%	50V
C503	1-163-021-91	CERAMIC CHIP	0.01µF	10%	50V
C504	1-102-030-00	CERAMIC	330pF	10%	500V
C505	1-109-842-11	CERAMIC	10pF	5%	2KV
C506	1-163-021-91	CERAMIC CHIP	0.01µF	10%	50V
C507	1-137-768-11	FILM	0.18µF	5%	400V
C508	1-128-526-11	ELECT	100µF	20%	25V
C509	1-164-004-11	CERAMIC CHIP	0.1µF	10%	25V
C510	1-102-228-00	CERAMIC	470pF	10%	500V
C511	1-119-858-11	FILM	0.068µF	5%	250V
C512	1-163-021-91	CERAMIC CHIP	0.01µF	10%	50V
C514	1-115-521-11	FILM	0.82µF	5%	250V
C515	1-163-021-91	CERAMIC CHIP	0.01µF	10%	50V
C516	1-117-664-11	FILM	0.27µF	5%	250V
C517	1-137-150-11	MYLAR	0.01µF	5%	50V
C518	1-137-718-11	FILM	4300pF	3%	1.8KV
⚠ C519	1-117-621-21	FILM	1200pF	3%	1.2KV
C520	1-163-021-91	CERAMIC CHIP	0.01µF	10%	50V
C521	1-107-444-11	CERAMIC	100pF	5%	2KV
C522	1-136-684-51	MYLAR	0.0022µF	10%	100V
C523	1-107-846-11	FILM	0.1µF	5%	250V
C524	1-135-843-51	ELECT	33µF	20%	200V
C525	1-136-060-00	FILM	0.047µF	5%	400V
⚠ C526	1-164-646-11	CERAMIC	2200pF	10%	500V
⚠ C527	1-117-879-91	MYLAR	0.01µF	10%	250V
C528	1-107-364-11	MYLAR	0.01µF	10%	200V
C529	1-136-060-00	FILM	0.047µF	5%	400V
C530	1-117-661-21	FILM	0.15µF	5%	250V
C531	1-119-860-11	FILM	0.082µF	5%	250V
⚠ C532	1-137-401-11	MYLAR	0.22µF	10%	100V
C533	1-126-960-11	ELECT	1µF	20%	50V
⚠ C534	1-137-419-11	MYLAR	0.033µF	10%	100V
⚠ C535	1-130-495-00	MYLAR	0.1µF	5%	50V
C536	1-163-021-91	CERAMIC CHIP	0.01µF	10%	50V
C537	1-162-117-00	CERAMIC	100pF	10%	500V
C538	1-163-021-91	CERAMIC CHIP	0.01µF	10%	50V
⚠ C539	1-137-150-11	MYLAR	0.01µF	10%	100V
⚠ C540	1-136-203-11	FILM	10000pF	5%	630V
⚠ C541	1-126-963-11	ELECT	4.7µF	20%	50V
⚠ C542	1-126-964-11	ELECT	10µF	20%	50V
C543	1-163-251-11	CERAMIC CHIP	100pF	5%	50V
⚠ C544	1-137-150-11	MYLAR	0.01µF	5%	50V
C545	1-163-037-11	CERAMIC CHIP	0.022µF	10%	50V
C546	1-163-259-91	CERAMIC CHIP	220pF	5%	50V
C547	1-128-740-91	ELECT	1µF	20%	50V
C548	1-130-471-00	MYLAR	0.001µF	5%	50V
C549	1-137-375-11	MYLAR	0.068µF	5%	50V
C550	1-126-935-11	ELECT	470µF	20%	16V
C552	1-163-021-91	CERAMIC CHIP	0.01µF	10%	50V
⚠ C553	1-164-161-11	CERAMIC CHIP	0.0022µF	10%	50V
⚠ C554	1-164-004-11	CERAMIC CHIP	0.1µF	10%	25V
⚠ C555	1-130-495-00	MYLAR	0.1µF	5%	50V

Downloaded from www.Manualslib.com manuals search engine

NOTE: The components identified by shading and ⚠ mark are critical for safety. Replace only with part number specified.

NOTE: Les composants identifies per un trame et une marque ⚠ sont critiques pour la securite. Ne les remplacer que par une piece portant le numero specifie.

D

	REF.NO.	PART NO.	DESCRIPTION	VALUES		
⚠	C556	1-163-259-91	CERAMIC CHIP	220pF	5%	50V
	C557	1-128-745-91	ELECT	22µF	20%	50V
⚠	C558	1-126-960-11	ELECT	1µF	20%	50V
⚠	C561	1-163-009-11	CERAMIC CHIP	0.001µF	10%	50V
	C562	1-107-882-91	ELECT	100µF	20%	16V
	C563	1-163-005-11	CERAMIC CHIP	470pF	10%	50V
	C564	1-107-823-11	CERAMIC CHIP	0.47µF	10%	16V
	C566	1-128-551-11	ELECT	22µF	20%	25V
	C568	1-136-060-00	FILM	0.047µF	5%	400V
	C569	1-130-495-00	MYLAR	0.1µF	5%	50V
	C570	1-109-842-11	CERAMIC	10pF	5%	2KV
	C571	1-109-842-11	CERAMIC	10pF	5%	2KV
	C572	1-107-651-11	ELECT	4.7µF	20%	250V
	C573	1-107-649-11	ELECT	2.2µF	20%	250V
	C574	1-117-879-91	MYLAR	0.01µF	10%	250V
	C575	1-135-843-51	ELECT	33µF	20%	200V
	C576	1-163-243-11	CERAMIC CHIP	47pF	5%	50V
	C579	1-109-879-11	CERAMIC	22pF	5%	2KV
	C581	1-107-782-81	CERAMIC	2200pF	1KV	
	C582	1-163-037-11	CERAMIC CHIP	0.022µF	10%	50V
	C601	1-107-909-11	ELECT	47µF	20%	10V
	C603	1-126-942-61	ELECT	1000µF	20%	25V
⚠	C604	1-104-708-11	FILM	0.47µF	20%	275V
⚠	C605	1-104-706-11	MYLAR	0.22µF	20%	250V
	C608	1-104-653-91	ELECT	220µF	20%	16V
	C609	1-117-699-11	CERAMIC	0.001µF	20%	250V
⚠	C610	1-107-852-11	ELECT(BLOCK)	330µF	20%	400V
	C611	1-163-007-11	CERAMIC CHIP	680pF	10%	50V
⚠	C612	1-119-858-11	FILM	0.068µF	5%	250V
⚠	C613	1-162-132-00	CERAMIC	270pF	10%	2KV
	C614	1-163-021-91	CERAMIC CHIP	0.01µF	10%	50V
	C615	1-163-037-11	CERAMIC CHIP	0.022µF	10%	50V
	C616	1-131-869-91	ELECT	22µF	20%	25V
	C617	1-131-869-91	ELECT	22µF	20%	25V
	C618	1-130-495-00	MYLAR	0.1µF	5%	50V
	C619	1-164-161-11	CERAMIC CHIP	0.0022µF	10%	50V
	C620	1-162-117-00	CERAMIC	100pF	10%	500V
	C621	1-135-842-51	ELECT	47µF	20%	250V
	C622	1-128-763-91	ELECT	100µF	20%	100V
	C624	1-131-868-91	ELECT	3300µF	20%	16V
	C625	1-126-943-11	ELECT	2200µF	20%	25V
	C626	1-104-653-91	ELECT	220µF	20%	16V
	C627	1-126-934-11	ELECT	220µF	20%	10V
	C628	1-128-526-11	ELECT	100µF	20%	25V
	C630	1-109-982-11	CERAMIC CHIP	1µF	10%	10V
	C631	1-113-910-11	CERAMIC	470pF	10%	250V
	C632	1-128-954-11	ELECT	1000µF	20%	25V

	REF.NO.	PART NO.	DESCRIPTION	VALUES		
	C633	1-164-004-11	CERAMIC CHIP	0.1µF	10%	25V
	C634	1-163-017-00	CERAMIC CHIP	.0047µF	10%	50V
	C637	1-104-653-91	ELECT	220µF	20%	16V
	C640	1-117-703-11	CERAMIC	.0047µF	20%	250V
	C641	1-107-882-91	ELECT	100µF	20%	16V
⚠	C643	1-117-703-11	CERAMIC	.0047µF	20%	250V
	C647	1-102-228-00	CERAMIC	470pF	10%	500V
	C650	1-163-019-00	CERAMIC CHIP	0.0068µF	10%	50V
	C656	1-164-004-11	CERAMIC CHIP	0.1µF	10%	25V
⚠	C660	1-117-703-11	CERAMIC	.0047µF	20%	250V
	C663	1-107-974-11	CERAMIC	47pF	5%	2KV
	C665	1-216-295-11	SHORT			
	C670	1-104-664-11	ELECT (CPD-G220S ONLY)	47µF	20%	25V
	C671	1-163-038-11	CERAMIC CHIP (CPD-G220S ONLY)	0.1µF		25V
	C672	1-128-954-11	ELECT (CPD-G220S ONLY)	1000µF	20%	25V
	C673	1-126-963-11	ELECT (CPD-G220S ONLY)	4.7µF	20%	50V
	C675	1-104-664-11	ELECT (CPD-G220S ONLY)	47µF	20%	10V
	C676	1-126-964-11	ELECT (CPD-G220S ONLY)	10µF	20%	50V
	C677	1-115-349-51	CERAMIC (CPD-G220S ONLY)	0.01µF	2KV	
	C681	1-107-905-11	ELECT	4.7µF	20%	50V
	C682	1-164-005-11	CERAMIC CHIP	0.47µF		25V
	C701	1-164-004-11	CERAMIC CHIP	0.1µF	10%	25V
	C702	1-126-963-11	ELECT	4.7µF	20%	50V
	C703	1-136-169-00	FILM	0.22µF	5%	50V
	C704	1-163-259-91	CERAMIC CHIP	220pF	5%	50V
	C706	1-163-113-00	CERAMIC CHIP	68pF	5%	50V
	C707	1-163-113-00	CERAMIC CHIP	68pF	5%	50V
	C708	1-130-495-00	MYLAR	0.1µF	5%	50V
	C709	1-126-941-11	ELECT	470µF	20%	25V
	C710	1-126-941-11	ELECT	470µF	20%	25V
	C711	1-130-495-00	MYLAR	0.1µF	5%	50V
	C712	1-130-495-00	MYLAR	0.1µF	5%	50V
	C713	1-126-933-11	ELECT	100µF	20%	16V
	C714	1-163-131-00	CERAMIC CHIP	390pF	5%	50V
	C715	1-126-933-11	ELECT	100µF	20%	16V
	C716	1-163-989-11	CERAMIC CHIP	0.033µF	10%	25V
	C718	1-163-989-11	CERAMIC CHIP	0.033µF	10%	25V
	C723	1-163-021-91	CERAMIC CHIP	0.01µF	10%	50V
	C725	1-163-021-91	CERAMIC CHIP	0.01µF	10%	50V
	C729	1-163-003-11	CERAMIC CHIP	330pF	10%	50V
	C733	1-163-003-11	CERAMIC CHIP	330pF	10%	50V
	C901	1-163-021-91	CERAMIC CHIP	0.01µF	10%	50V

Downloaded from www.Manualslib.com manuals search engine

NOTE: The components identified by shading and ⚠ mark are critical for safety. Replace only with part number specified.

NOTE: Les composants identifies per un trame et une marque ⚠ sont critiques pour la securite. Ne les remplacer que par une piece portant le numero specifie.

D

	REF.NO.	PART NO.	DESCRIPTION	VALUES		
	C902	1-126-935-11	ELECT	470µF	20%	16V
	C905	1-137-375-11	MYLAR	0.068µF	5%	50V
	C906	1-136-177-00	FILM	1µF	5%	50V
	C908	1-163-021-91	CERAMIC CHIP	0.01µF	10%	50V
	C909	1-126-933-11	ELECT	100µF	20%	16V
	C910	1-164-004-11	CERAMIC CHIP	0.1µF	10%	25V
	C911	1-163-021-91	CERAMIC CHIP	0.01µF	10%	50V
	C912	1-126-933-11	ELECT	100µF	20%	16V
	C913	1-130-495-00	MYLAR	0.1µF	5%	50V
	C914	1-163-231-11	CERAMIC CHIP	15pF	5%	50V
	C915	1-163-231-11	CERAMIC CHIP	15pF	5%	50V
	C916	1-126-965-11	ELECT	22µF	20%	50V
	C917	1-163-021-91	CERAMIC CHIP	0.01µF	10%	50V
	C918	1-126-965-11	ELECT	22µF	20%	50V
	C920	1-164-004-11	CERAMIC CHIP	0.1µF	10%	25V
	C921	1-126-935-11	ELECT	470µF	20%	16V
	C922	1-107-712-11	ELECT	3.3µF	20%	50V
	C923	1-163-133-00	CERAMIC CHIP	470pF	5%	50V
	C924	1-126-962-11	ELECT	3.3µF	20%	50V
	C925	1-163-021-91	CERAMIC CHIP	0.01µF	10%	50V
	C926	1-126-767-11	ELECT	1000µF	20%	16V
	C928	1-163-021-91	CERAMIC CHIP	0.01µF	10%	50V
	C929	1-126-963-11	ELECT	4.7µF	20%	50V
	C930	1-163-021-91	CERAMIC CHIP	0.01µF	10%	50V
	C931	1-163-133-00	CERAMIC CHIP	470pF	5%	50V
	C933	1-163-251-11	CERAMIC CHIP	100pF	5%	50V
	C935	1-107-823-11	CERAMIC CHIP	0.47µF	10%	16V
	C936	1-163-251-11	CERAMIC CHIP	100pF	5%	50V
	C938	1-126-933-11	ELECT	100µF	20%	16V
	C939	1-163-251-11	CERAMIC CHIP	100pF	5%	50V
	C940	1-163-243-11	CERAMIC CHIP	47pF	5%	50V
	C941	1-163-243-11	CERAMIC CHIP	47pF	5%	50V
	C942	1-163-021-91	CERAMIC CHIP	0.01µF	10%	50V
	C943	1-164-004-11	CERAMIC CHIP	0.1µF	10%	25V
	C947	1-163-021-91	CERAMIC CHIP	0.01µF	10%	50V
	C949	1-126-933-11	ELECT	100µF	20%	16V
	C950	1-126-933-11	ELECT	100µF	20%	16V
⚠	C951	1-163-021-91	CERAMIC CHIP	0.01µF	10%	50V
	C952	1-164-004-11	CERAMIC CHIP	0.1µF	10%	25V

CONNECTOR

*	CN501	1-793-239-11	PIN,CONNECTOR (PC BOARD) 6P
	CN512	1-695-915-11	TAB (CONTACT)
*⚠	CN600	1-691-960-11	PIN,CONNECTOR (PC BOARD) 3P
*	CN601	1-580-689-11	PIN,CONNECTOR (PC BOARD) 4P
*	CN602	1-506-371-00	PIN,CONNECTOR 2P
*	CN605	1-564-508-11	PLUG,CONNECTOR 5P (CPD-G220S ONLY)
*	CN606	1-564-512-11	PLUG,CONNECTOR 9P
*	CN701	1-764-333-11	PLUG,CONNECTOR 10P
*	CN901	1-508-879-11	BASE POST 4P
*	CN902	1-564-511-11	PLUG,CONNECTOR 8P
*	CN903	1-785-704-21	PIN,CONNECTOR (PC BOARD) 7P
*	CN904	1-564-508-11	PLUG,CONNECTOR 5P

DIODE

	D401	8-719-052-90	DIODE D1NL40-TA
	D402	8-719-921-40	DIODE MTZJ-T-77-4.7B
	D403	8-719-988-61	DIODE 1SS355TE-17
	D404	8-719-050-84	DIODE RB441Q-40T-77
	D501	8-719-070-19	DIODE NNCD12A-T1
	D502	8-719-981-00	DIODE D3S4M
	D503	8-759-157-40	DIODE HZT33-02TE
⚠	D504	8-719-070-19	DIODE NNCD12A-T1
	D505	8-719-063-70	DIODE D1NL20U-TA
	D506	8-719-082-77	DIODE FMQ-G1FSLF681
	D507	8-719-069-54	DIODE UDZSTE-175.1B
	D508	8-719-988-61	DIODE 1SS355TE-17
	D509	8-719-070-19	DIODE NNCD12A-T1
	D510	8-719-052-90	DIODE D1NL40-TA
	D511	8-719-052-90	DIODE D1NL40-TA
	D512	8-719-911-19	DIODE 1SS119-25TD
⚠	D513	8-719-052-90	DIODE D1NL40-TA
	D514	8-719-970-83	DIODE HSS82-TJ
⚠	D515	8-719-018-82	DIODE ERA34-10TP1
	D516	8-719-081-01	DIODE ER204
⚠	D517	8-759-157-40	DIODE HZT33-02TE
	D518	8-719-070-19	DIODE NNCD12A-T1
	D519	8-719-109-89	DIODE MTZJ-T-77-5.6B
	D522	8-719-911-19	DIODE 1SS119-25TD
	D523	8-719-911-19	DIODE 1SS119-25TD
	D524	8-719-051-85	DIODE HSS83TD
	D525	8-719-051-85	DIODE HSS83TD
	D527	8-719-069-54	DIODE UDZSTE-175.1B
	D530	8-719-063-70	DIODE D1NL20U-TA
	D531	8-719-063-70	DIODE D1NL20U-TA
⚠	D601	8-719-510-53	DIODE D4SB60L-F
⚠	D602	8-719-911-19	DIODE 1SS119-25TD
	D603	8-719-911-19	DIODE 1SS119-25TD
	D605	8-719-110-31	DIODE MTZJ-T-77-12B
⚠	D606	8-719-053-19	DIODE µF4007G23
	D607	8-719-053-19	DIODE µF4007G23
	D608	8-719-110-49	DIODE MTZJ-T-77-18
⚠	D609	8-719-911-19	DIODE 1SS119-25TD
	D610	8-719-921-40	DIODE MTZJ-T-77-4.7B
	D611	8-719-067-68	DIODE FMC-26UA
	D612	8-719-053-19	DIODE µF4007G23

Downloaded from www.Manualslib.com manuals search engine

NOTE: The components identified by shading and ⚠ mark are critical for safety. Replace only with part number specified.

NOTE: Les composants identifies per un trame et une marque ⚠ sont critiques pour la securite. Ne les remplacer que par une piece portant le numero specifie.

D

REF.NO.	PART NO.	DESCRIPTION	VALUES
D613	8-719-083-22	DIODE BT149G-112-OT384	
D614	8-719-032-12	DIODE D1NS6-TA2	
D616	8-719-921-40	DIODE MTZJ-T-77-4.7B	
D617	8-719-083-21	DIODE PG106R	
D618	8-719-058-38	DIODE FMN-G12S	
D619	8-719-058-38	DIODE FMN-G12S	
D620	8-719-300-76	DIODE RGP10DG23	
D621	8-719-911-19	DIODE 1SS119-25TD	
D622	8-719-058-38	DIODE FMN-G12S	
D623	8-719-110-31	DIODE MTZJ-T-77-12B	
D625	8-719-977-40	DIODE UDZ-TE-17-13B	
D633	8-719-510-41	DIODE D10SC9M (CPD-G220S ONLY)	
D634	8-719-063-73	DIODE D1NL20U-TR (CPD-G220S ONLY)	
D635	8-719-082-52	DIODE P6KE150AG23 (CPD-G220S ONLY)	
D636	8-719-053-19	DIODE µF4007G23 (CPD-G220S ONLY)	
D638	8-719-110-49	DIODE MTZJ-T-77-18	
D704	8-719-911-19	DIODE 1SS119-25TD	
D901	8-719-069-55	DIODE UDZSTE-175.6B	
D902	8-719-109-89	DIODE MTZJ-T-77-5.6B	
D903	8-719-050-84	DIODE RB441Q-40T-77	
D904	8-719-069-55	DIODE UDZSTE-175.6B	
D905	8-719-988-61	DIODE 1SS355TE-17	
D906	8-719-988-61	DIODE 1SS355TE-17	
D907	8-719-988-61	DIODE 1SS355TE-17	
D908	8-719-988-61	DIODE 1SS355TE-17	
D909	8-719-081-65	DIODE AZ23C6V2	
D911	8-719-062-51	DIODE 1PS226-115	
D912	8-719-069-55	DIODE UDZSTE-175.6B	
D914	8-719-062-51	DIODE 1PS226-115	
D917	8-719-062-51	DIODE 1PS226-115	
D918	8-719-069-55	DIODE UDZSTE-175.6B	
D919	8-719-069-55	DIODE UDZSTE-175.6B	
D920	8-719-050-84	DIODE RB441Q-40T-77	
D924	8-719-069-55	DIODE UDZSTE-175.6B	
D928	8-719-081-65	DIODE AZ23C6V2	
D929	8-719-081-65	DIODE AZ23C6V2	
D930	8-719-081-65	DIODE AZ23C6V2	
D931	8-719-081-65	DIODE AZ23C6V2	
D936	8-719-069-55	DIODE UDZSTE-175.6B	
D937	8-719-069-55	DIODE UDZSTE-175.6B	
D943	8-719-801-78	DIODE MA151WK-TX	
	FUSE		
⚠ F601	1-576-232-11	FUSE (H.B.C.)	5A/250V

REF.NO.	PART NO.	DESCRIPTION	VALUES
	FERRITE BEAD		
FB502	1-412-911-11	FERRITE	0µH
FB503	1-412-911-11	FERRITE	0µH
FB504	1-412-911-11	FERRITE	0µH
FB506	1-412-911-11	FERRITE	0µH
FB507	1-412-911-11	FERRITE	0µH
FB508	1-412-911-11	FERRITE	0µH
FB601	1-412-911-11	FERRITE	0µH
FB904	1-543-961-22	FERRITE	0µH
	FUSE HOLDER		
FH1	1-533-223-11	CLIP,	FUSE
FH2	1-533-223-11	CLIP,	FUSE
	IC		
IC401	8-759-593-28	IC LA78040	
⚠ IC501	8-759-570-29	IC UPC6757CS	
IC502	8-759-803-42	IC LA6500-FA	
⚠ IC601	8-759-594-75	IC TEA1504/N2	
IC602	8-759-592-79	IC BA00AST-V5	
⚠ IC603	8-749-016-35	IC TLP621D4-Y-LF2T	
IC604	8-759-663-69	IC AS431LAN-TR	
⚠ IC605	8-759-637-83	IC PQ12RD8S	
⚠ IC607	8-759-450-47	IC BA05T	
IC608	8-759-231-53	IC L7805CV	
IC610	8-759-696-69	IC TOP233Y (CPD-G220S ONLY)	
IC611	8-759-663-69	IC AS431LAN-TR (CPD-G220S ONLY)	
IC701	8-759-595-52	IC CXA8070AP	
IC702	8-749-018-54	IC STK391-120	
IC703	8-759-822-38	IC LA6510	
⚠ IC901	6-800-150-01	IC CPU	
IC902	8-759-594-40	IC CXA8071CP	
IC904	8-759-352-91	IC PST9143NL	
IC905	8-759-640-41	IC BR24C08F-E2	
IC906	8-759-697-54	IC BR24C21F-E2	
IC908	8-759-491-32	IC TC74HCT04AF(EL)	
	CHIP CONDUCTOR		
JR001	1-216-295-11	SHORT	
JR002	1-216-296-11	SHORT	
JR003	1-216-296-11	SHORT	
JR006	1-216-296-11	SHORT	
JR007	1-216-295-11	SHORT	
JR008	1-216-295-11	SHORT	
JR009	1-216-295-11	SHORT	
JR010	1-216-296-11	SHORT	

Downloaded from www.Manualslib.com manuals search engine

NOTE: The components identified by shading and ⚠ mark are critical for safety. Replace only with part number specified.

NOTE: Les composants identifies per un trame et une marque ⚠ sont critiques pour la securite. Ne les remplacer que par une piece portant le numero specifie.

D

	REF.NO.	PART NO.	DESCRIPTION	VALUES
	JR011	1-216-296-11	SHORT	
	JR012	1-216-296-11	SHORT	
	JR013	1-216-296-11	SHORT	
	JR014	1-216-296-11	SHORT	
	JR019	1-216-295-11	SHORT	
	JR021	1-216-296-11	SHORT	
	JR022	1-216-296-11	SHORT	
	JR028	1-216-295-11	SHORT	
	JR031	1-216-296-11	SHORT	
	JR047	1-216-296-11	SHORT	
	JR904	1-216-295-11	SHORT	
		COIL		
⚠	L501	1-406-663-21	INDUCTOR	47µH
⚠	L502	1-406-663-21	INDUCTOR	47µH
	L503	1-419-862-11	INDUCTOR	5µH
	L505	1-412-552-11	INDUCTOR	2.2MH
	L506	1-412-552-11	INDUCTOR	2.2MH
	L508	1-424-693-11	COIL, HORIZONTAL LINEARITY	
	L510	1-419-863-11	COIL, HORIZONTAL CENTER	
	L602	1-400-054-21	INDUCTOR	22µH
	L604	1-406-665-11	INDUCTOR	100µH
	L606	1-406-665-11	INDUCTOR	100µH
	L607	1-412-521-31	INDUCTOR (CPD-G220S ONLY)	4.7µH
	L901	1-414-857-11	INDUCTOR	100µH
	L902	1-414-857-11	INDUCTOR	100µH
		FILTER		
⚠	LF602	1-429-180-11	TRANSFORMER, LINE FILTER	
		PHOTO COUPLER		
	PH601	8-749-016-35	IC TLP621D4-Y-LF2T (CPD-G220S ONLY)	
		IC LINK		
⚠	PS501	1-533-588-51	LINK, IC	
		TRANSISTOR		
	Q501	8-729-120-28	TRANSISTOR 2SC2412K-T-146-QR	
	Q502	8-729-026-49	TRANSISTOR 2SA1037AK-T146-QR	
⚠	Q503	8-729-035-54	TRANSISTOR 2SJ449(1)	
	Q504	8-729-031-89	TRANSISTOR 2SC3941A-QR(TA)	
	Q505	8-729-026-49	TRANSISTOR 2SA1037AK-T146-QR	
	Q507	8-729-055-02	TRANSISTOR 2SC5681-CA	
	Q508	8-729-120-28	TRANSISTOR 2SC2412K-T-146-QR	
⚠	Q510	8-729-046-60	TRANSISTOR STP4NB80FP(025Y)	
	Q511	8-729-055-29	TRANSISTOR STD5NE10-1	
	Q512	8-729-043-41	TRANSISTOR 2SK2098-01MR-F119	
	Q513	8-729-043-41	TRANSISTOR 2SK2098-01MR-F119	
	Q514	8-729-043-41	TRANSISTOR 2SK2098-01MR-F119	
	Q515	8-729-047-72	TRANSISTOR 2SK3332	
	Q516	8-729-047-72	TRANSISTOR 2SK3332	
	Q519	8-729-423-33	TRANSISTOR 2SC3311A-QRSTA	
	Q520	8-729-035-54	TRANSISTOR 2SJ449(1)	
	Q521	8-729-026-49	TRANSISTOR 2SA1037AK-T146-QR	
	Q522	8-729-027-23	TRANSISTOR DTA114EKA-T146	
	Q524	8-729-026-49	TRANSISTOR 2SA1037AK-T146-QR	
	Q525	8-729-120-28	TRANSISTOR 2SC2412K-T-146-QR	
	Q601	8-729-029-92	TRANSISTOR DTC143ESA-TP	
⚠	Q602	8-729-048-61	TRANSISTOR 2SK2843LBS2SONY	
	Q603	8-729-900-53	TRANSISTOR DTC114EKA-T146	
	Q604	8-729-119-78	TRANSISTOR 2SC3311A-RTA	
	Q605	8-729-900-53	TRANSISTOR DTC114EKA-T146	
	Q612	8-729-423-33	TRANSISTOR 2SC3311A-QRSTA	
	Q901	8-729-026-49	TRANSISTOR 2SA1037AK-T146-QR	
	Q903	8-729-120-28	TRANSISTOR 2SC2412K-T-146-QR	
		RESISTOR		
	R401	1-249-383-11	CARBON	1.5 5% 1/4W
	R402	1-215-866-11	METAL OXIDE	330 5% 1W
	R403	1-214-661-21	METAL	1.5 1% 1/4W
	R404	1-216-669-11	METAL CHIP	5.6K 0.50% 1/10W
	R405	1-214-661-21	METAL	1.5 1% 1/4W
	R406	1-216-677-11	METAL CHIP	12K 0.50% 1/10W
	R407	1-216-057-00	RES-CHIP	2.2K 5% 1/10W
	R408	1-216-073-00	RES-CHIP	10K 5% 1/10W
	R409	1-216-669-11	METAL CHIP	5.6K 0.50% 1/10W
	R410	1-216-677-11	METAL CHIP	12K 0.50% 1/10W
	R412	1-216-373-11	METAL OXIDE	2.2 5% 2W
	R413	1-216-373-11	METAL OXIDE	2.2 5% 2W
	R501	1-247-807-31	CARBON	100 5% 1/4W
	R502	1-218-759-11	METAL CHIP	200K 0.50% 1/10W
	R503	1-216-675-91	METAL CHIP	10K 0.50% 1/10W
	R504	1-249-377-11	CARBON	0.47 5% 1/4W
	R505	1-216-073-00	RES-CHIP	10K 5% 1/10W
	R506	1-215-481-00	METAL	330K 1% 1/4W
	R507	1-215-431-00	METAL	2.7K 1% 1/4W
	R508	1-247-807-31	CARBON	100 5% 1/4W
	R509	1-249-433-11	CARBON	22K 5% 1/4W
⚠	R510	1-215-444-00	METAL	9.1K 1% 1/4W
⚠	R511	1-249-381-11	CARBON	1 5% 1/4W
	R512	1-249-389-11	CARBON	4.7 5% 1/4W
	R513	1-215-888-00	METAL OXIDE	220 5% 2W
	R514	1-215-387-00	METAL	39 1% 1/4W
	R515	1-249-417-11	CARBON	1K 5% 1/4W

Downloaded from www.Manualslib.com manuals search engine

NOTE: The components identified by shading and ⚠ mark are critical for safety. Replace only with part number specified.

NOTE: Les composants identifies per un trame et une marque ⚠ sont critiques pour la securite. Ne les remplacer que par une piece portant le numero specifie.

D

	REF.NO.	PART NO.	DESCRIPTION	VALUES		
	R516	1-214-844-81	METAL	150	1%	1/2W
	R517	1-216-395-00	METAL OXIDE	3.3	5%	3W
	R518	1-216-395-00	METAL OXIDE	3.3	5%	3W
	R519	1-247-903-00	CARBON	1M	5%	1/4W
⚠	R520	1-249-405-11	CARBON	100	5%	1/4W
	R521	1-249-417-11	CARBON	1K	5%	1/4W
	R522	1-249-401-11	CARBON	47	5%	1/4W
	R523	1-215-463-00	METAL	56K	1%	1/4W
	R524	1-215-463-00	METAL	56K	1%	1/4W
	R525	1-249-417-11	CARBON	1K	5%	1/4W
	R526	1-260-095-11	CARBON	470	5%	1/2W
⚠	R527	1-249-429-11	CARBON	10K	5%	1/4W
	R528	1-216-057-00	RES-CHIP	2.2K	5%	1/10W
	R529	1-260-095-11	CARBON	470	5%	1/2W
⚠	R530	1-216-474-11	METAL OXIDE	82	5%	3W
⚠	R531	1-216-474-11	METAL OXIDE	82	5%	3W
⚠	R532	1-249-385-11	CARBON	2.2	5%	1/4W
	R533	1-249-417-11	CARBON	1K	5%	1/4W
	R534	1-249-405-11	CARBON	100	5%	1/4W
	R535	1-215-463-00	METAL	56K	1%	1/4W
	R536	1-249-417-11	CARBON	1K	5%	1/4W
	R537	1-215-463-00	METAL	56K	1%	1/4W
	R539	1-215-445-00	METAL	10K	1%	1/4W
⚠	R540	1-215-476-00	METAL	200K	1%	1/4W
⚠	R541	1-215-421-00	METAL	1K	1%	1/4W
⚠	R542	1-215-421-00	METAL	1K	1%	1/4W
⚠	R543	1-249-389-11	CARBON	4.7	5%	1/4W
⚠	R544	1-247-889-00	CARBON	270K	5%	1/4W
⚠	R545	1-216-691-11	METAL CHIP	47K	0.50%	1/10W
⚠	R546	1-215-457-00	METAL	33K	1%	1/4W
⚠	R547	1-215-477-00	METAL	220K	1%	1/4W
⚠	R548	1-215-423-00	METAL	1.2K	1%	1/4W
⚠	R549	1-215-464-00	METAL	62K	1%	1/4W
⚠	R550	1-215-423-00	METAL	1.2K	1%	1/4W
	R551	1-216-687-11	METAL CHIP	33K	0.50%	1/10W
⚠	R552	1-215-463-00	METAL	56K	1%	1/4W
	R553	1-216-698-11	METAL CHIP	91K	0.50%	1/10W
	R554	1-218-756-11	METAL CHIP	150K	0.50%	1/10W
	R556	1-216-691-11	METAL CHIP	47K	0.50%	1/10W
	R557	1-216-079-00	RES-CHIP	18K	5%	1/10W
	R558	1-216-675-91	METAL CHIP	10K	0.50%	1/10W
	R559	1-215-431-00	METAL	2.7K	1%	1/4W
	R560	1-216-679-11	METAL CHIP	15K	0.50%	1/10W
⚠	R561	1-216-474-11	METAL OXIDE	82	5%	3W
	R562	1-215-451-00	METAL	18K	1%	1/4W
	R563	1-249-383-11	CARBON	1.5	5%	1/4W
⚠	R564	1-216-687-11	METAL CHIP	33K	0.50%	1/10W
	R565	1-215-481-00	METAL	330K	1%	1/4W
	R566	1-215-859-00	METAL OXIDE	22	5%	1W
⚠	R567	1-216-073-00	RES-CHIP	10K	5%	1/10W
⚠	R568	1-249-437-11	CARBON	47K	5%	1/4W
	R569	1-216-643-11	METAL CHIP	470	0.50%	1/10W
	R570	1-219-749-91	CARBON	10K	5%	1/2W
	R571	1-216-069-00	RES-CHIP	6.8K	5%	1/10W
	R572	1-260-288-11	CARBON	0.47	5%	1/2W
⚠	R574	1-249-421-11	CARBON	2.2K	5%	1/4W
	R575	1-260-316-51	CARBON	100	5%	1/2W
	R577	1-215-911-11	METAL OXIDE	100	5%	3W
	R578	1-260-316-51	CARBON	100	5%	1/2W
	R581	1-249-429-11	CARBON	10K	5%	1/4W
	R582	1-249-399-11	CARBON	33	5%	1/4W
	R583	1-216-073-00	RES-CHIP	10K	5%	1/10W
	R584	1-216-065-91	RES-CHIP	4.7K	5%	1/10W
	R585	1-249-417-11	CARBON	1K	5%	1/4W
	R586	1-249-421-11	CARBON	2.2K	5%	1/4W
	R587	1-216-049-11	RES-CHIP	1K	5%	1/10W
	R589	1-216-065-91	RES-CHIP	4.7K	5%	1/10W
	R590	1-216-683-11	METAL CHIP	22K	0.50%	1/10W
	R591	1-214-844-81	METAL	150	1%	1/2W
	R592	1-214-844-81	METAL	150	1%	1/2W
	R594	1-216-033-00	RES-CHIP	220	5%	1/10W
⚠	R595	1-215-477-00	METAL	220K	1%	1/4W
⚠	R596	1-215-423-00	METAL	1.2K	1%	1/4W
	R597	1-259-880-11	CARBON	2.2M	5%	1/4W
	R599	1-216-049-11	RES-CHIP	1K	5%	1/10W
⚠	R600	1-205-998-11	CEMENTED	1	5%	10W
	R602	1-219-513-11	CARBON	4.7M	5%	1/2W
	R603	1-249-420-11	CARBON	1.8K	5%	1/4W
⚠	R604	1-219-754-11	CARBON	680K	5%	1/2W
	R606	1-218-768-11	METAL CHIP	470K	0.50%	1/10W
	R607	1-216-081-00	RES-CHIP	22K	5%	1/10W
	R608	1-215-473-00	METAL	150K	1%	1/4W
	R609	1-216-665-11	METAL CHIP	3.9K	0.50%	1/10W
	R610	1-216-651-11	METAL CHIP	1K	0.50%	1/10W
	R611	1-216-009-91	RES-CHIP	22	5%	1/10W
	R612	1-247-791-91	CARBON	22	5%	1/4W
⚠	R613	1-219-513-11	CARBON	4.7M	5%	1/2W
	R614	1-216-345-11	METAL OXIDE	0.47	5%	1W
	R615	1-216-117-00	RES-CHIP	680K	5%	1/10W
	R616	1-216-121-11	RES-CHIP	1M	5%	1/10W
	R617	1-216-025-11	RES-CHIP	100	5%	1/10W
	R618	1-216-635-11	METAL CHIP	220	0.50%	1/10W
	R619	1-215-893-11	METAL OXIDE	1.5K	5%	2W
	R620	1-216-687-11	METAL CHIP	33K	0.50%	1/10W
	R621	1-216-094-00	RES-CHIP	75K	5%	1/10W
	R622	1-216-009-91	RES-CHIP	22	5%	1/10W

Downloaded from www.Manualslib.com manuals search engine

NOTE: The components identified by shading and ⚠ mark are critical for safety. Replace only with part number specified.

NOTE: Les composants identifies per un trame et une marque ⚠ sont critiques pour la securite. Ne les remplacer que par une piece portant le numero specifie.

D

REF.NO.	PART NO.	DESCRIPTION	VALUES		
R623	1-216-615-91	METAL CHIP	33	0.50%	1/10W
R624	1-216-611-11	METAL CHIP	22	0.50%	1/10W
R625	1-260-332-51	CARBON	2.2K	5%	1/2W
R626	1-216-057-00	RES-CHIP	2.2K	5%	1/10W
⚠ R627	1-260-288-11	CARBON	0.47	5%	1/2W
R628	1-216-674-11	METAL CHIP	9.1K	0.50%	1/10W
R630	1-216-679-11	METAL CHIP (CPD-G220S ONLY)	15K	0.50%	1/10W
R631	1-216-049-11	RES-CHIP (CPD-G220S ONLY)	1K	5%	1/10W
R632	1-216-675-91	METAL CHIP (CPD-G220S ONLY)	10K	0.50%	1/10W
R633	1-249-429-11	CARBON	10K	5%	1/4W
R634	1-216-049-11	RES-CHIP (CPD-G220S ONLY)	1K	5%	1/10W
R635	1-215-925-11	METAL OXIDE	22K	5%	3W
R636	1-215-879-11	METAL OXIDE	47K	5%	1W
R639	1-216-049-11	RES-CHIP (CPD-G220S ONLY)	1K	5%	1/10W
R640	1-249-381-11	CARBON	1	5%	1/4W
R641	1-249-391-11	CARBON (CPD-G220S ONLY)	6.8	5%	1/4W
R642	1-216-641-11	METAL CHIP	390	0.50%	1/10W
R643	1-216-697-91	METAL CHIP	82K	0.50%	1/10W
R647	1-216-073-00	RES-CHIP	10K	5%	1/10W
R648	1-216-669-11	METAL CHIP	5.6K	0.50%	1/10W
R649	1-216-659-11	METAL CHIP	2.2K	0.50%	1/10W
R650	1-215-471-00	METAL	120K	1%	1/4W
R651	1-249-377-11	CARBON (CPD-G220S ONLY)	0.47	5%	1/4W
R654	1-216-344-00	METAL OXIDE	0.39	5%	1W
R655	1-247-807-31	CARBON	100	5%	1/4W
R656	1-215-893-11	METAL OXIDE	1.5K	5%	2W
R660	1-215-879-11	METAL OXIDE	47K	5%	1W
R665	1-216-061-00	RES-CHIP	3.3K	5%	1/10W
R667	1-215-911-11	METAL OXIDE	100	5%	3W
R693	1-249-413-11	CARBON	470	5%	1/4W
R697	1-216-350-11	METAL OXIDE	1.2	5%	1W
R698	1-216-091-00	RES-CHIP	56K	5%	1/10W
R699	1-215-865-11	METAL OXIDE	220	5%	1W
R703	1-249-410-11	CARBON	270	5%	1/4W
R704	1-215-441-00	METAL	6.8K	1%	1/4W
R705	1-215-449-00	METAL	15K	1%	1/4W
R706	1-216-679-11	METAL CHIP	15K	0.50%	1/10W
R707	1-216-661-11	METAL CHIP	2.7K	0.50%	1/10W
R708	1-216-661-11	METAL CHIP	2.7K	0.50%	1/10W
R709	1-216-659-11	METAL CHIP	2.2K	0.50%	1/10W
R710	1-216-659-11	METAL CHIP	2.2K	0.50%	1/10W
R711	1-216-346-00	METAL OXIDE	0.56	5%	1W
R712	1-215-860-11	METAL OXIDE	33	5%	1W
R713	1-216-347-11	METAL OXIDE	0.68	5%	1W
R716	1-215-860-11	METAL OXIDE	33	5%	1W
R717	1-216-353-00	METAL OXIDE	2.2	5%	1W
R718	1-215-863-11	METAL OXIDE	100	5%	1W
R719	1-216-679-11	METAL CHIP	15K	0.50%	1/10W
R720	1-216-295-11	SHORT			
R721	1-216-011-00	RES-CHIP	27	5%	1/10W
R724	1-215-859-00	METAL OXIDE	22	5%	1W
R727	1-216-679-11	METAL CHIP	15K	0.50%	1/10W
R728	1-215-863-11	METAL OXIDE	100	5%	1W
R729	1-216-353-00	METAL OXIDE	2.2	5%	1W
R730	1-215-857-11	METAL OXIDE	10	5%	1W
R731	1-216-295-11	SHORT			
R733	1-216-295-11	SHORT			
R735	1-216-661-11	METAL CHIP	2.7K	0.50%	1/10W
R737	1-216-659-11	METAL CHIP	2.2K	0.50%	1/10W
R739	1-216-073-00	RES-CHIP	10K	5%	1/10W
⚠ R741	1-249-380-11	CARBON	0.82	5%	1/4W
⚠ R743	1-249-380-11	CARBON	0.82	5%	1/4W
R745	1-216-298-00	RES-CHIP	2.2	5%	1/10W
R747	1-216-298-00	RES-CHIP	2.2	5%	1/10W
R753	1-216-679-11	METAL CHIP	15K	0.50%	1/10W
R755	1-216-679-11	METAL CHIP	15K	0.50%	1/10W
R903	1-216-049-11	RES-CHIP	1K	5%	1/10W
R904	1-216-049-11	RES-CHIP	1K	5%	1/10W
R905	1-216-065-91	RES-CHIP	4.7K	5%	1/10W
R906	1-216-073-00	RES-CHIP	10K	5%	1/10W
R907	1-260-316-51	CARBON	100	5%	1/2W
R908	1-216-057-00	RES-CHIP	2.2K	5%	1/10W
R909	1-216-057-00	RES-CHIP	2.2K	5%	1/10W
R910	1-249-411-11	CARBON	330	5%	1/4W
R911	1-249-418-11	CARBON	1.2K	5%	1/4W
R912	1-249-417-11	CARBON	1K	5%	1/4W
R913	1-249-401-11	CARBON	47	5%	1/4W
R914	1-249-401-11	CARBON	47	5%	1/4W
R915	1-216-065-91	RES-CHIP	4.7K	5%	1/10W
R916	1-216-077-91	RES-CHIP	15K	5%	1/10W
R917	1-216-077-91	RES-CHIP	15K	5%	1/10W
R918	1-249-417-11	CARBON	1K	5%	1/4W
R919	1-216-073-00	RES-CHIP	10K	5%	1/10W
R920	1-249-421-11	CARBON	2.2K	5%	1/4W
R924	1-216-041-00	RES-CHIP	470	5%	1/10W
R925	1-216-065-91	RES-CHIP	4.7K	5%	1/10W
R926	1-216-295-11	SHORT			
R929	1-216-057-00	RES-CHIP	2.2K	5%	1/10W
R931	1-216-659-11	METAL CHIP	2.2K	0.50%	1/10W
R933	1-249-417-11	CARBON	1K	5%	1/4W

Downloaded from www.Manualslib.com manuals search engine

NOTE: The components identified by shading and ⚠ mark are critical for safety. Replace only with part number specified.

A component identified by this ⋈ symbol indicates that it has been carefully factory-selected to satisfy regulations regarding X-ray radiation. Should replacement be required, replace only with the value originally used.

D H1 U

	REF.NO.	PART NO.	DESCRIPTION	VALUES		
⚠	R934	1-249-429-11	CARBON	10K	5%	1/4W
	R935	1-247-807-31	CARBON	100	5%	1/4W
	R936	1-247-807-31	CARBON	100	5%	1/4W
	R937	1-247-807-31	CARBON	100	5%	1/4W
	R938	1-216-025-11	RES-CHIP	100	5%	1/10W
	R950	1-216-051-00	RES-CHIP	1.2K	5%	1/10W
	R951	1-216-025-11	RES-CHIP	100	5%	1/10W
	R957	1-249-401-11	CARBON	47	5%	1/4W
	R958	1-249-401-11	CARBON	47	5%	1/4W
	R969	1-247-807-31	CARBON	100	5%	1/4W
	R971	1-216-057-00	RES-CHIP	2.2K	5%	1/10W
	R972	1-216-057-00	RES-CHIP	2.2K	5%	1/10W
	R973	1-216-049-11	RES-CHIP	1K	5%	1/10W
	R981	1-216-065-91	RES-CHIP	4.7K	5%	1/10W
	R982	1-249-413-11	CARBON	470	5%	1/4W
	R983	1-216-025-11	RES-CHIP	100	5%	1/10W
	R984	1-216-089-11	RES-CHIP	47K	5%	1/10W
	R985	1-216-093-91	RES-CHIP	68K	5%	1/10W
			VARIABLE RESISTOR			
⋈⚠	RV501	1-241-767-21	RES, ADJ, CERMET	100K		
		3-710-578-01	COVER, VOLUME, 6 MOLD			
	RV502	1-227-387-11	RES, VAR	100		
			RELAY			
⚠	RY601	1-755-067-21	RELAY			
			SWITCH			
⚠	S602	1-554-472-00	SWITCH PUSH (1 KEY)			
			SPARK GAP			
⚠	SG501	1-519-422-11	GAP, SPARK			
	SG601	1-533-982-21	GAP, SPARK			
			TRANSFORMER			
⚠	T501	1-453-365-11	FBT ASSY NX-4405/VQL4			
	T503	1-437-350-11	TRANSFORMER, FERRITE (DFT)			
	T504	1-433-978-11	TRANSFORMER, HORIZONTAL DRIVE			
	T505	1-435-766-11	TRANSFORMER, FERRITE (HST)			
	T506	1-435-765-11	TRANSFORMER, FERRITE(LCT)			
⚠	T601	1-435-768-11	TRANSFORMER, CONVERTER (SRT)			
	T602	1-435-767-11	TRANSFORMER, CONVERTER (SRT) (CPD-G220S ONLY)			
			THERMISTOR			
⚠	TH600	1-803-339-11	THERMISTOR, NTC			
	TH601	1-803-540-11	THERMISTOR, PTC			

	REF.NO.	PART NO.	DESCRIPTION	VALUES		
			VARISTOR			
⚠	VA601	1-801-073-31	VARISTOR TNR14V471K660			
			CRYSTAL			
	X901	1-767-826-21	VIBRATOR, CRYSTAL			
	X902	1-767-933-11	OSCILLATOR, CERAMIC			

H1

	* A-1372-935-A	H1 BOARD, MOUNTED	
		CAPACITOR	
	C1001	1-130-495-00	MYLAR 0.1µF 5% 50V
	C1002	1-102-074-00	CERAMIC 0.001µF 10% 50V
		CONNECTOR	
*	CN1001	1-564-520-11	PLUG,CONNECTOR 5P
		DIODE	
	D1001	8-719-911-19	DIODE 1SS119-25TD
	D1002	8-719-911-19	DIODE 1SS119-25TD
	D1003	8-719-911-19	DIODE 1SS119-25TD
	D1004	8-719-911-19	DIODE 1SS119-25TD
	D1005	8-719-081-89	DIODE SML76755WNTP15
		RESISTOR	
	R1001	1-249-422-11	CARBON 2.7K 5% 1/4W
	R1002	1-249-413-11	CARBON 470 5% 1/4W
	R1003	1-249-414-11	CARBON 560 5% 1/4W
	R1004	1-249-417-11	CARBON 1K 5% 1/4W
	R1005	1-249-419-11	CARBON 1.5K 5% 1/4W
	R1006	1-247-843-11	CARBON 3.3K 5% 1/4W
		SWITCH	
	S1003	1-762-196-21	SWITCH TACTILE
	S1007	1-786-155-11	SWITCH TACTILE

U

	* A-1373-853-A	U BOARD, MOUNTED (CPD-G220S ONLY)	
		CAPACITOR	
	C1701	1-126-382-11	ELECT 100µF 20% 16V
	C1702	1-126-382-11	ELECT 100µF 20% 16V
	C1703	1-164-004-11	CERAMIC CHIP 0.1µF 10% 25V
	C1704	1-137-194-81	FILM 0.47µF 5% 50V
	C1705	1-137-194-81	FILM 0.47µF 5% 50V

Downloaded from www.Manualslib.com manuals search engine

U

	REF.NO.	PART NO.	DESCRIPTION	VALUES		
	C1706	1-126-926-11	ELECT	1000µF	20%	10V
	C1707	1-115-871-11	ELECT	1µF	20%	50V
	C1708	1-164-004-11	CERAMIC CHIP	0.1µF	10%	25V
	C1709	1-164-004-11	CERAMIC CHIP	0.1µF	10%	25V
	C1710	1-164-004-11	CERAMIC CHIP	0.1µF	10%	25V
	C1712	1-126-791-11	ELECT	10µF	20%	16V
	C1713	1-126-784-11	ELECT	33µF	20%	10V
	C1714	1-126-382-11	ELECT	100µF	20%	10V
	C1715	1-126-382-11	ELECT	100µF	20%	10V
		CONNECTOR				
*	CN1701	1-564-520-11	PLUG,CONNECTOR 5P			
	CN1702	1-564-505-11	PLUG,CONNECTOR 2P			
		DIODE				
	D1701	8-719-988-61	DIODE 1SS355TE-17			
	D1702	8-719-988-61	DIODE 1SS355TE-17			
	D1703	8-719-988-61	DIODE 1SS355TE-17			
	D1704	8-719-988-61	DIODE 1SS355TE-17			
	D1705	8-719-988-61	DIODE 1SS355TE-17			
		FERRITE BEAD				
	FB1701	1-216-295-11	SHORT			
	FB1702	1-216-295-11	SHORT			
	FB1703	1-216-295-11	SHORT			
	FB1704	1-216-295-11	SHORT			
	FB1705	1-216-295-11	SHORT			
	FB1706	1-216-295-11	SHORT			
	FB1707	1-216-295-11	SHORT			
	FB1708	1-216-295-11	SHORT			
	FB1709	1-412-911-11	FERRITE	0µH		
		IC				
	IC1701	8-759-478-64	IC TDA7053A			
	IC1702	8-759-828-61	IC PQ05RD08			
		JACK				
	J1701	1-815-103-11	JACK			
	J1702	1-815-103-21	JACK			
		CHIP CONDUCTOR				
	JR1701	1-216-296-11	SHORT			
	JR1702	1-216-296-11	SHORT			
	JR1703	1-216-296-11	SHORT			
		TRANSISTOR				
	Q1701	8-729-101-07	TRANSISTOR 2SB798-T1-DLDK			
	Q1702	8-729-120-28	TRANSISTOR 2SC2412K-T-146-R			

REF.NO.	PART NO.	DESCRIPTION	VALUES		
Q1703	8-729-907-00	TRANSISTOR DTC114EUA-T106			
Q1704	8-729-907-00	TRANSISTOR DTC114EUA-T106			
Q1705	8-729-907-00	TRANSISTOR DTC114EUA-T106			
Q1706	8-729-905-35	TRANSISTOR 2SC4081T106R			
	RESISTOR				
R1701	1-249-403-11	CARBON	68	5%	1/4W
R1702	1-249-403-11	CARBON	68	5%	1/4W
R1703	1-216-027-00	RES-CHIP	120	5%	1/10W
R1704	1-216-027-00	RES-CHIP	120	5%	1/10W
R1705	1-216-091-00	RES-CHIP	56K	5%	1/10W
R1706	1-216-091-00	RES-CHIP	56K	5%	1/10W
R1707	1-260-288-11	CARBON	0.47	5%	1/2W
R1708	1-216-666-11	METAL CHIP	4.3K	0.50%	1/10W
R1709	1-216-683-11	METAL CHIP	22K	0.50%	1/10W
R1711	1-249-384-11	CARBON	1.8	5%	1/4W
R1712	1-216-683-11	METAL CHIP	22K	0.50%	1/10W
	VARIABLE RESISTOR				
RV1701	1-227-312-11	RES, VAR, CARBON	50K		

Downloaded from www.Manualslib.com manuals search engine

SONY CORPORATION
Sony Technology Center
Technical Services
Service Promotion Department

9-978-877-01

English
2001BJ74064-1
Printed in the U.S.A.
© 2001.2

Downloaded from www.Manualslib.com manuals search engine

D BOARD SCHEMATIC DIAGRAM

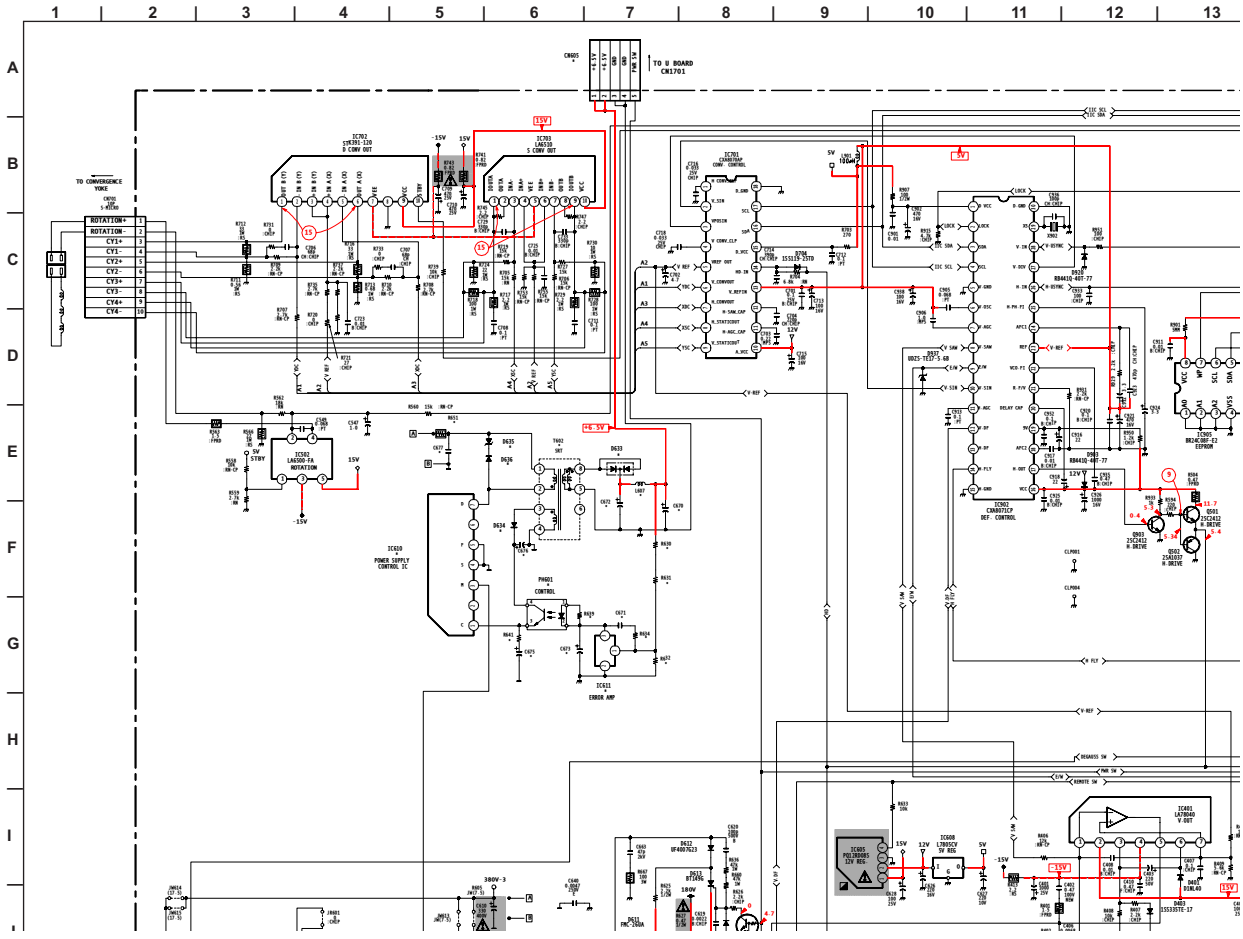

Downloaded from www.Manualslib.com manuals search engine

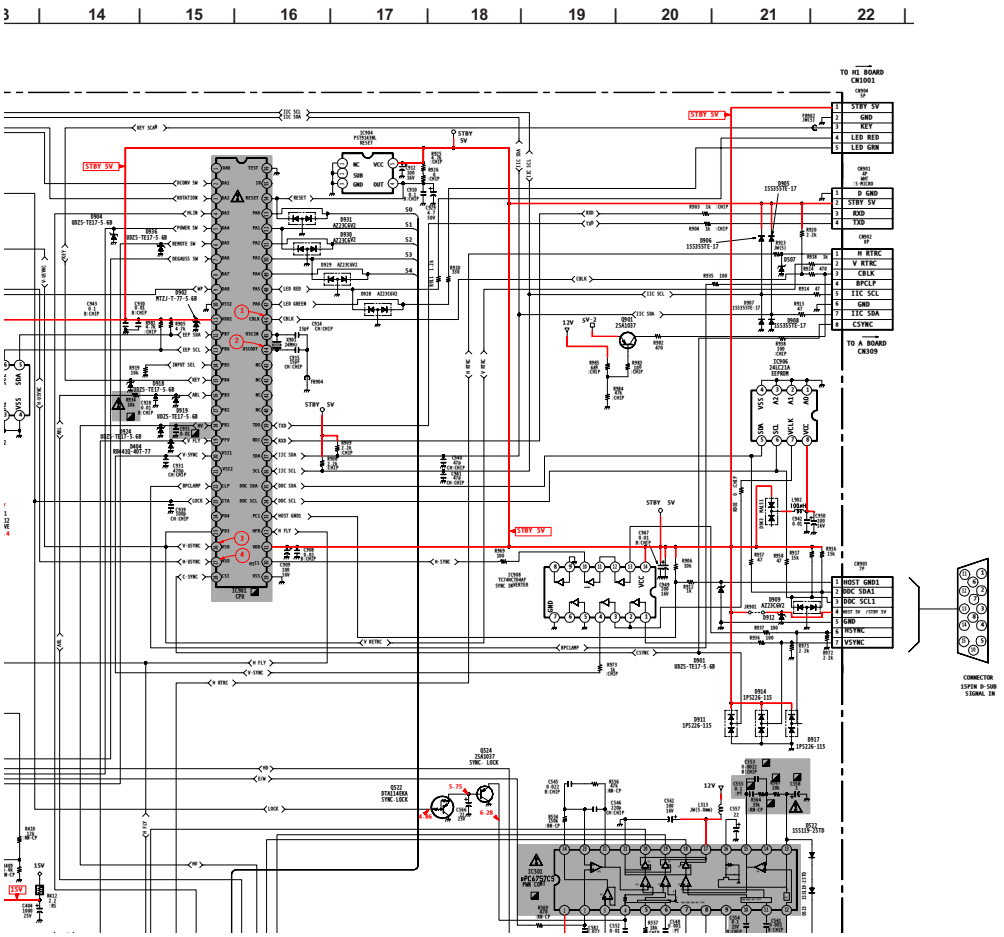

Downloaded from www.Manualslib.com manuals search engine

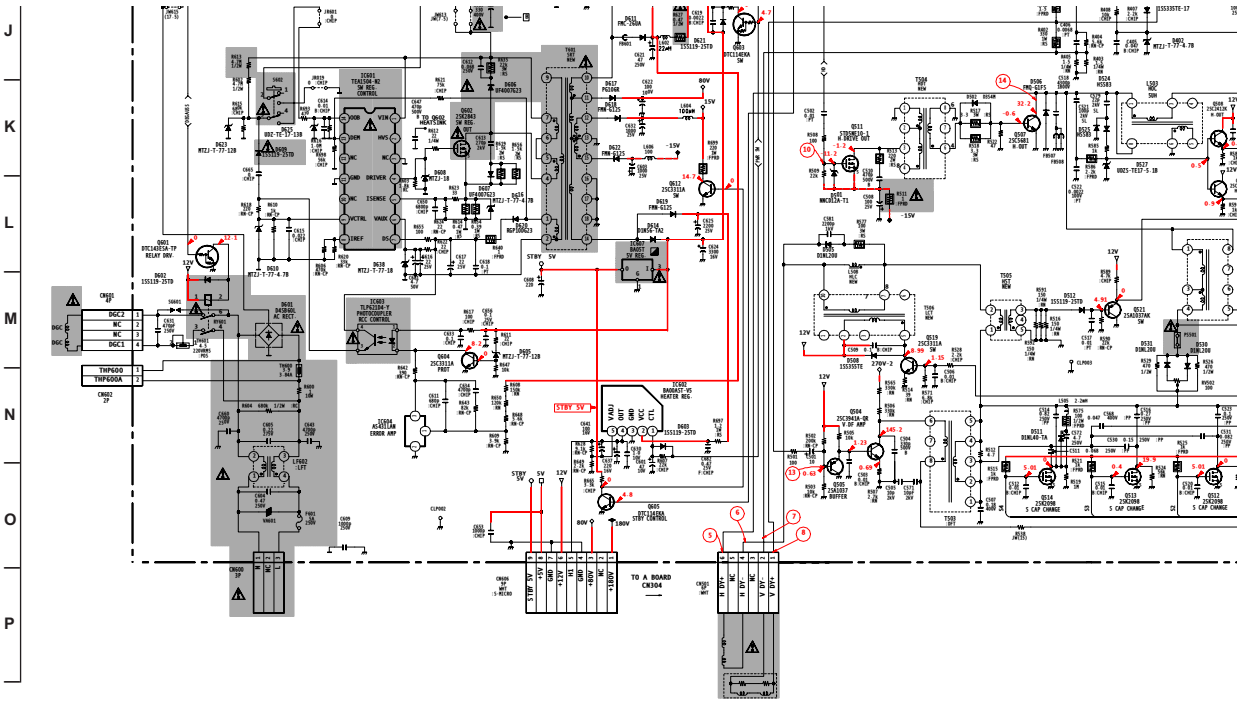

Downloaded from www.Manualslib.com manuals search engine

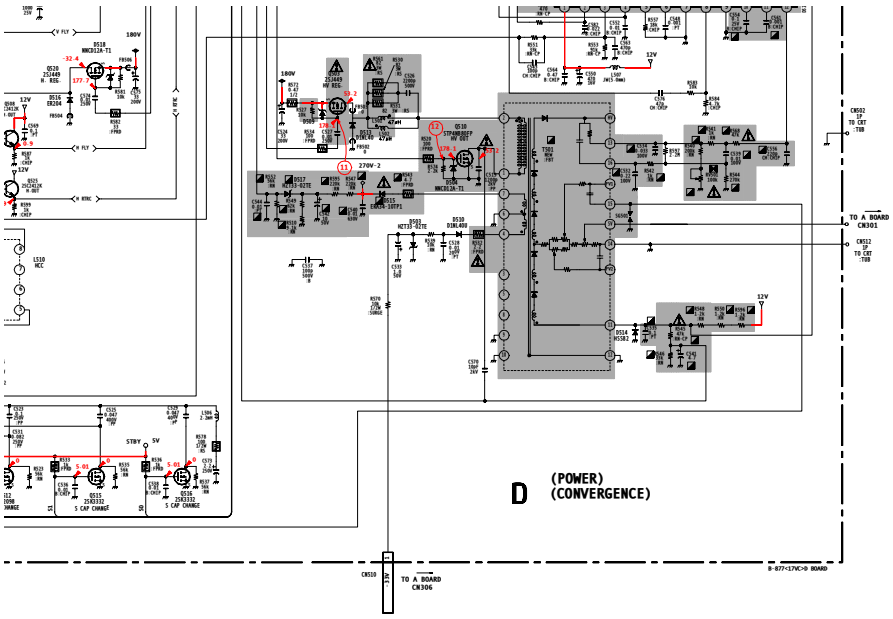

Downloaded from www.Manualslib.com manuals search engine

D [POWER] [CONVERGENCE]

COMPONENT SIDE

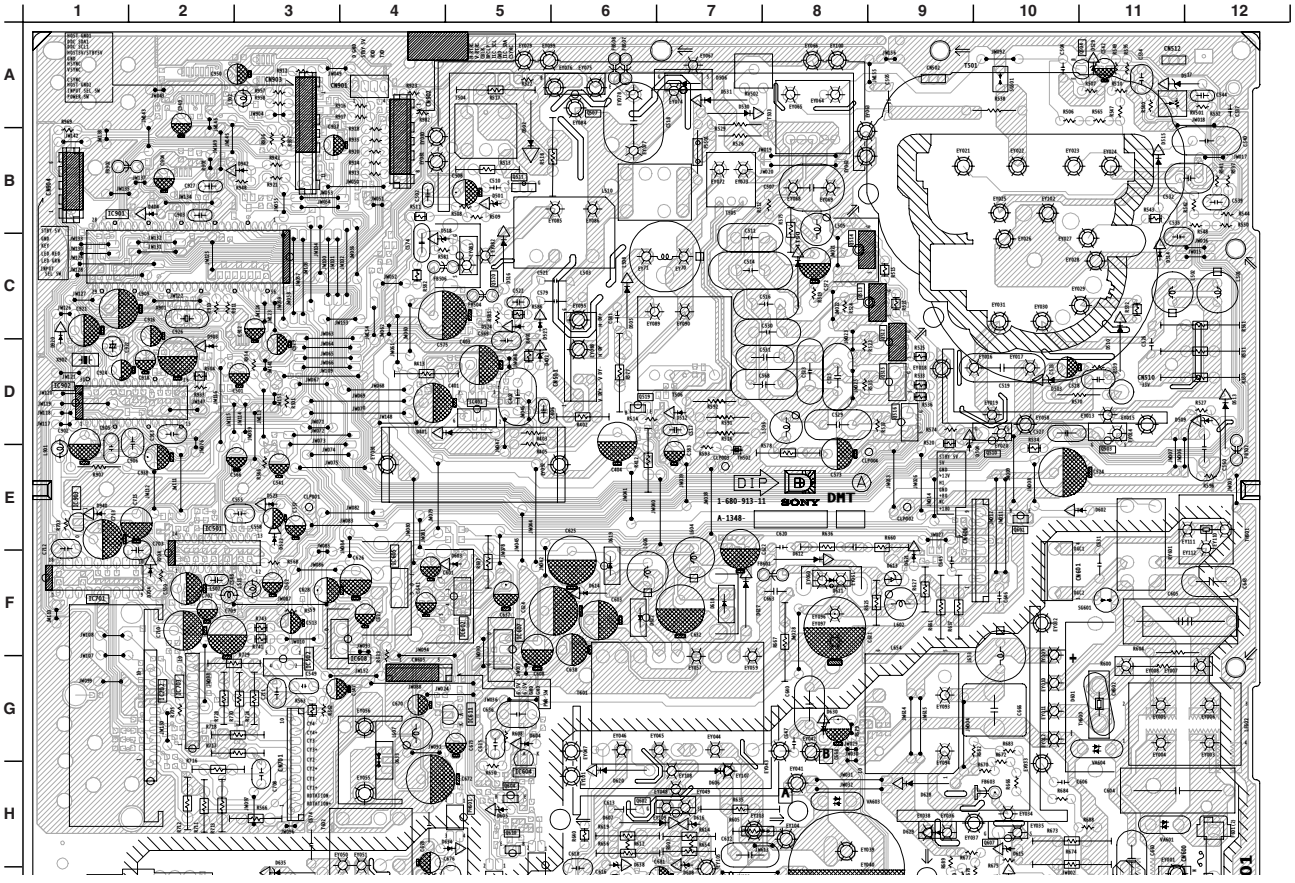

Downloaded from www.Manualslib.com manuals search engine

CONDUCTOR SIDE

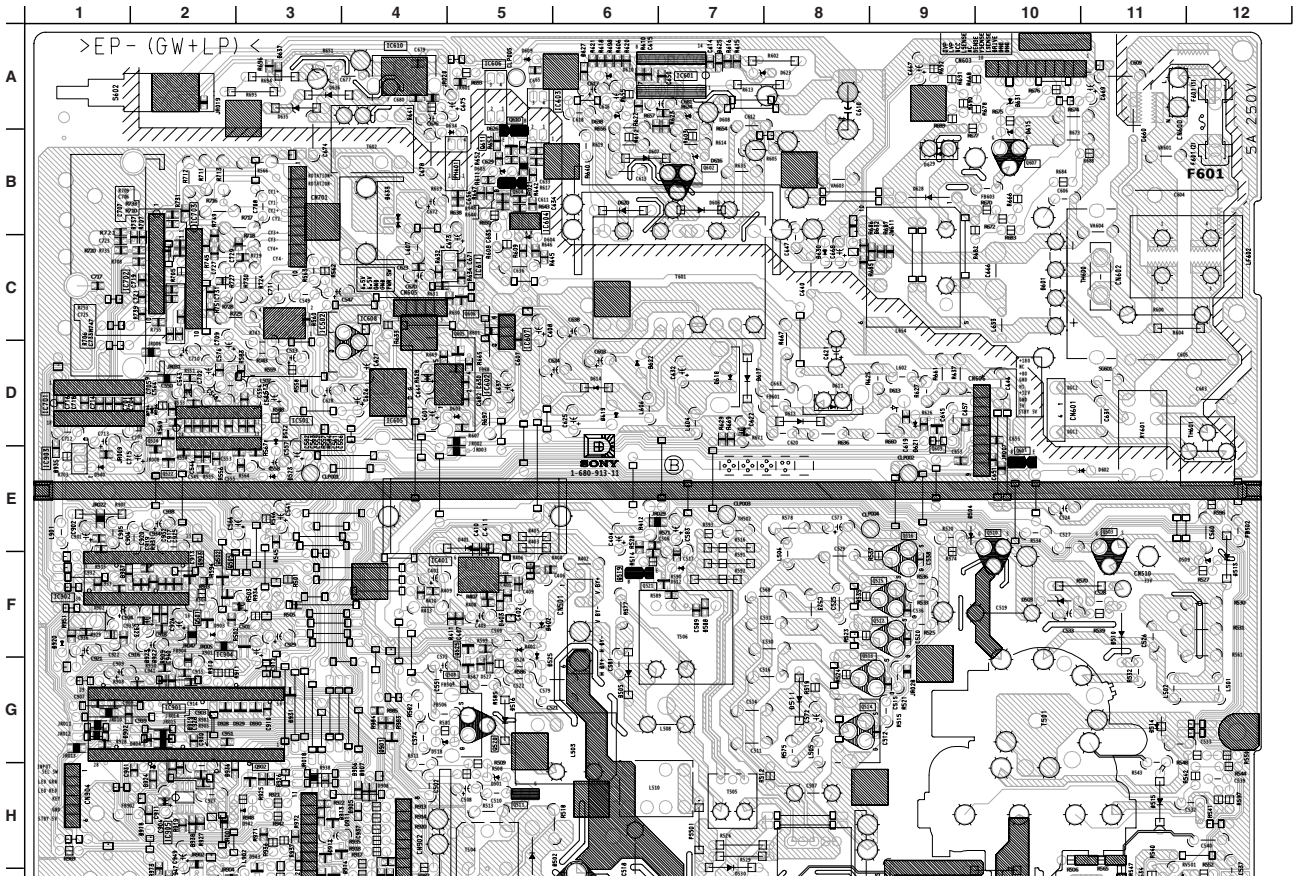

Downloaded from www.Manualslib.com manuals search engine

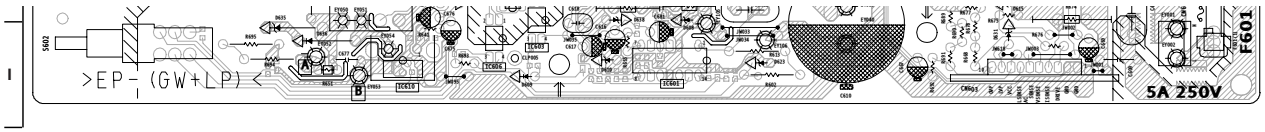

D BOARD LOCATOR LIST

DIODE				COMP	COND		COMP	COND		COMP	COND		COMP	COND		COMP	COND		COMP	COND		COMP	COND
	COMP	COND	D514	C-11	--	D608	H-7	--	D635	I-3	--	D920	D-1	--	IC605	F-4	--	Q504	A-11	--	Q602	--	B-7
D401	D-4	--	D515	B-12	--	D609	I-5	--	D636	I-3	--	D924	--	H-2	IC607	F-5	--	Q505	--	F-3	Q603	--	E-9
D402	D-5	--	D516	C-5	--	D610	I-6	--	D638	H-6	--	D928	--	G-2	IC608	F-4	--	Q507	--	I-6	Q604	--	B-5
D403	--	F-5	D517	A-11	--	D611	F-8	--	D704	F-2	--	D929	--	G-3	IC610	I-4	--	Q508	--	G-5	Q605	--	D-5
D404	B-2	--	D518	C-4	--	D612	F-8	--	D901	--	I-3	D930	--	G-3	IC611	G-5	--	Q510	--	E-10	Q612	H-7	--
D501	B-5	--	D522	E-3	--	D613	F-9	--	D902	--	G-2	D931	--	G-3	IC701	F-1	--	Q511	--	H-5	Q903	--	F-2
D502	A-5	--	D523	E-3	--	D614	F-6	--	D903	D-2	--	D936	--	H-2	IC702	G-2	--	Q512	--	F-9			
D503	D-10	--	D524	C-5	--	D616	H-7	--	D905	--	H-4	D937	--	F-1	IC703	G-2	--	Q513	--	G-9			
D504	E-10	--	D525	C-5	--	D617	F-7	--	D906	--	H-3	D943	--	H-3	IC902	D-1	--	Q514	--	G-8			
D505	C-6	--	D527	C-6	--	D618	F-7	--	D907	--	H-3	IC			IC904	--	F-2	Q515	--	F-9			
D506	A-7	--	D530	A-7	--	D619	F-6	--	D908	--	H-4		COMP	COND	IC905	D-1	--	Q516	--	F-9			
D507	--	I-4	D531	A-7	--	D620	H-6	--	D909	--	I-4	IC401	D-5	--	IC906	--	I-3	Q519	--	F-6			
D508	--	F-10	D601	G-10	--	D621	F-9	--	D911	--	H-4	IC501	E-2	--	IC908	--	I-2	Q520	C-5	--			
D509	D-11	--	D602	E-11	--	D622	F-6	--	D912	--	I-3	IC502	G-3	--	TRANSISTOR			Q521	--	F-6			
D510	D-11	--	D603	F-5	--	D623	I-7	--	D914	--	H-4	IC601	I-7	--		COMP	COND	Q522	--	E-2			
D511	C-8	--	D605	--	B-5	D625	I-7	--	D917	--	H-4	IC602	F-5	--	Q501	--	F-2	Q524	--	D-2			
D512	D-7	--	D606	H-7	--	D633	--	B-4	D918	--	H-2	IC603	I-5	--	Q502	--	F-2	Q525	D-9	--			
D513	D-12	--	D607	--	B-6	D634	H-5	--	D919	--	G-2	IC604	H-5	--	Q503	--	E-11	Q601	--	E-10			

Downloaded from www.Manualslib.com manuals search engine

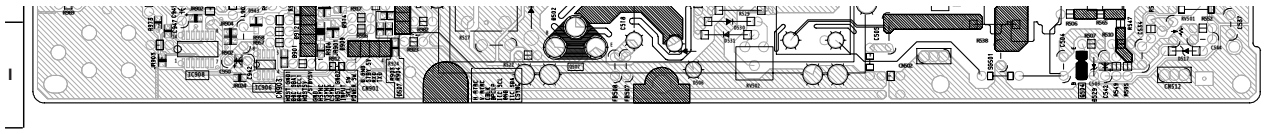

Downloaded from www.Manualslib.com manuals search engine

PRINTING THE SERVICE MANUAL

The PDF of this service manual is not designed to be printed from cover to cover. The pages vary in size, and must therefore be printed in sections based on page dimensions.

NON-SCHEMATIC PAGES

Data that does NOT INCLUDE schematic diagrams are formatted to 8.5 x 11 inches and can be printed on standard letter-size and/or A4-sized paper.

SCHEMATIC DIAGRAMS

The schematic diagram pages are provided in two ways, full size and tiled. The full-sized schematic diagrams are formatted on paper sizes between 8.5" x 11" and 18" x 30" depending upon each individual diagram size. Those diagrams that are LARGER than 11" x 17" in full-size mode have been tiled for your convience and can be printed on standard 11" x 17" (tabloid-size) paper, and reassembled.

TO PRINT FULL SIZE SCHEMATIC DIAGRAMS

If you have access to a large paper plotter or printer capable of outputting the full-sized diagrams, output as follows:

1) Note the page size(s) of the schematics you want to output as indicated in the middle window at the bottom of the viewing screen.

2) Go to the File menu and select Print Set-up. Choose the printer name and driver for your large format printer. Confirm that the printer settings are set to output the indicated page size or larger.

3) Close the Print Set Up screen and return to the File menu. Select "Print..." Input the page number of the schematic(s) you want to print in the print range window. Choose OK.

TO PRINT TILED VERSION OF SCHEMATICS

Schematic pages that are larger than 11" x 17" full-size are provided in a 11" x 17" printable tiled format near the end of the document. These can be printed to tabloid-sized paper and assembled to full-size for easy viewing.

If you have access to a printer capable of outputting the tabloid size (11" x 17") paper, then output the tiled version of the diagram as follows:

1) Note the page number(s) of the schematics you want to output as indicated in the middle window at the bottom of the viewing screen.

2) Go to the File menu and select Print Set-up. Choose the printer name and driver for your printer. Confirm that the plotter settings are set to output 11" x 17", or tabloid size paper in landscape ( ) mode.

3) Close the Print Set Up screen and return to the File menu. Select "Print..." Input the page number of the schematic(s) you want to print in the print range window. Choose OK.

TO PRINT SPECIFIC SECTIONS OF A SCHEMATIC

To print just a particular section of a PDF, rather than a full page, access the Graphics Select tool in the Acrobat Reader tool bar.

1) To view the Graphics Select Tool, press the mouse button over the Text Select Tool which looks like:
This tool will expand to reveal to additional tools.
Choose the Graphics Select tool by placing the cursor over the button on of the far right that looks like:

2) After selecting the Graphics Select Tool, place your cursor in the document window and the cursor will change to a plus (+) symbol. Click and drag the cursor over the area you want to print. When you release the mouse button, a marquee (or dotted lined box) will be displayed outlining the area you selected.

3) With the marquee in place, go to the file menu and select the "Print..." option. When the print window appears, choose the option under the section called "Print Range" which says "Selected Graphic".

Select OK and the output will print only the area that you outlined with the marquee.

(continued >)

Downloaded from www.Manualslib.com manuals search engine

ON-SCREEN SEARCH OPTION

All of the text within the service manual PDF is content searchable. This means that you can enter any text, word, phrase or reference number that appears in the manual, and the PDF software will search, find and move the cursor to the location where you requested text first appears. This feature can be particularly useful in locating components on a specific schematic or printed wire circuit board (PWB) diagrams.

Follow these steps to effectively locate a component on a schematic diagram:

1) Locate the schematic you want to search by clicking on the corresponding bookmark on the left side of the screen. The view on the right of the screen will then jump to the desired schematic page.

2) Magnify the diagram to at least 400% before conducting a component search. This will enable you to easily view the reference number when it is highlighted on screen. To do this, click on the magnifying glass button on the tool bar at the top of the screen. Move the cursor over the diagram and RIGHT click you mouse. Select the 400% magnification option on the pop-up menu. Click on the button with the icon of the open hand to deactivate the magnification tool

3) Search the diagram (or the entire manual) by clicking on the binocular button tool at the top of the screen. The “Find” window will appear and allow you to type in your desired text. Type in a reference designator, such as R502, and click on the “Find” button. If the component is not on the diagram, but is listed anywhere else in the manual, the cursor will jump to the first location the text is found in the file. To find another instance of that same text, click on the binocular button again and select “Find Again.”

Downloaded from www.Manualslib.com manuals search engine

SONY

4-081-489-11 (1)

Trinitron® Color Computer Display

Operating Instructions ____ US

Mode d'emploi ____ FR

Manual de instrucciones ____ ES

CPD-G220R
CPD-G220S

© 2000 Sony Corporation

Downloaded from www.Manualslib.com manuals search engine

Owner's Record

The model and serial numbers are located at the rear of the unit. Record these numbers in the spaces provided below. Refer to them whenever you call upon your dealer regarding this product.
Model No._____ Serial No. _____

WARNING

To prevent fire or shock hazard, do not expose the unit to rain or moisture.

Dangerously high voltages are present inside the unit. Do not open the cabinet. Refer servicing to qualified personnel only.

FCC Notice

This equipment has been tested and found to comply with the limits for a Class B digital device, pursuant to Part 15 of the FCC Rules. These limits are designed to provide reasonable protection against harmful interference in a residential installation. This equipment generates, uses, and can radiate radio frequency energy and, if not installed and used in accordance with the instructions, may cause harmful interference to radio communications. However, there is no guarantee that interference will not occur in a particular installation. If this equipment does cause harmful interference to radio or television reception, which can be determined by turning the equipment off and on, the user is encouraged to try to correct the interference by one or more of the following measures:

– Reorient or relocate the receiving antenna.
– Increase the separation between the equipment and receiver.
– Connect the equipment into an outlet on a circuit different from that to which the receiver is connected.
– Consult the dealer or an experienced radio/TV technician for help.

You are cautioned that any changes or modifications not expressly approved in this manual could void your authority to operate this equipment.

IMPORTADOR (Para Mexico unicamente/For Mexico only)

Sony Electronicos de Mexico, S.A. de C.V.
Henry Ford No.29
Fraccionamiento San Nicolas, Tlalnepantla
Estado de Mexico, CP54030
Tel.: 321-1000
R.F.C. SEM-941001-BJA

IMPORTANTE

Para prevenir cualquier mal funcionamiento y evitar daños, por favor, lea detalladamente este manual de instrucciones antes de conectar y operar este equipo.

INFORMATION
This product complies with Swedish National Council for Metrology (MPR) standards issued in December 1990 (MPR II) for very low frequency (VLF) and extremely low frequency (ELF).

INFORMATION
Ce produit est conforme aux normes du Swedish National Council for Metrology de décembre 1990 (MPR II) en ce qui concerne les fréquences très basses (VLF) et extrêmement basses (ELF).

INFORMACIÓN
Este producto cumple las normas del Consejo Nacional Sueco para Metrología (MPR) emitidas en diciembre de 1990 (MPR II) para frecuencias muy bajas (VLF) y frecuencias extremadamente bajas (ELF).

NOTICE

This notice is applicable for USA/Canada only.
If shipped to USA/Canada, install only a UL LISTED/CSA LABELLED power supply cord meeting the following specifications:
SPECIFICATIONS

Plug Type	Nema-Plug 5-15p
Cord	Type SVT or SJT, minimum 3 × 18 AWG
Length	Maximum 15 feet
Rating	Minimum 7 A, 125 V

NOTICE

Cette notice s'applique aux Etats-Unis et au Canada uniquement.
Si cet appareil est export* aux Etats-Unis ou au Canada, utiliser le cordon d'alimentation portant la mention UL LISTED/CSA LABELLED et remplissant les conditions suivantes:
SPECIFICATIONS

Type de fiche	Fiche Nema 5-15 broches
Cordon	Type SVT ou SJT, minimum 3 × 18 AWG
Longueur	Maximum 15 pieds
Tension	Minimum 7 A, 125 V

As an ENERGY STAR Partner, Sony Corporation has determined that this product meets the ENERGY STAR guidelines for energy efficiency.

This monitor complies with the TCO'99 guidelines.

For questions regarding your product or for the Sony Service Center nearest you call:

1-800-222-SONY(7669)

or write to:
Sony Customer Information Center
1 Sony Drive, Mail Drop #T1-11, Park Ridge, NJ 07656 USA

The number below is for FCC related matters only.

Declaration of Conformity

Trade Name:	Sony
Model No.:	CPD-G220*
Responsible Party:	Sony Electronics Inc.
Address:	1 Sony Drive, Park Ridge, NJ. 07656 USA
Telephone No.:	201-930-6972

This device complies with Part 15 of the FCC Rules. Operation is subject to the following two conditions: (1) This device may not cause harmful interference, and (2) this device must accept any interference received, including interference that may cause undesired operation. * Can be replaced with any letter from A to Z.

Downloaded from www.Manualslib.com manuals search engine

Table of Contents

Precautions 4
Identifying parts and controls 5

Setup 6

Step 1: Connect your monitor to your computer 6
Step 2: Connect the power cord 6
Step 3: Turn on the monitor and computer 7
Selecting the on-screen menu language (LANGUAGE) 7

Customizing Your Monitor 8

Navigating the menu 8
Adjusting the brightness and contrast 9
Adjusting the size and the centering of the picture (SIZE/CENTER) 9
Adjusting the shape of the picture (GEOMETRY) 10
Adjusting the color of the picture (COLOR) 10
Adjusting the convergence (CONVERGENCE) 10
Changing the OSD language (LANGUAGE) 10
Additional settings (OPTION) 11

Technical Features 12

Preset and user modes 12
Power saving function 12

Troubleshooting 12

If thin lines appear on your screen (damper wires) 12
On-screen messages 12
Trouble symptoms and remedies 13
Self-diagnosis function 15

Specifications 15

Appendix i

Preset mode timing table i
TCO'99 Eco-document i

US

- Trinitron® and FD Trinitron® are registered trademarks of Sony Corporation.
- Macintosh is a trademark licensed to Apple Computer, Inc., registered in the U.S.A. and other countries.
- Windows® and MS-DOS are registered trademarks of Microsoft Corporation in the United States and other countries.
- IBM PC/AT and VGA are registered trademarks of IBM Corporation of the U.S.A.
- VESA and DDC™ are trademarks of the Video Electronics Standard Association.
- ENERGY STAR is a U.S. registered mark.
- All other product names mentioned herein may be the trademarks or registered trademarks of their respective companies.
- Furthermore, "™" and "®" are not mentioned in each case in this manual.

Downloaded from www.Manualslib.com manuals search engine

Precautions

Warning on power connections

- Use the supplied power cord. If you use a different power cord, be sure that it is compatible with your local power supply.
  For the customers in the U.S.A.
  If you do not use the appropriate cord, this monitor will not conform to mandatory FCC standards.

  Example of plug types

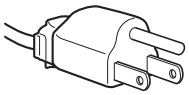

for 100 to 120 V AC

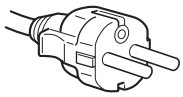

for 200 to 240 V AC

- Before disconnecting the power cord, wait at least 30 seconds after turning off the power to allow the static electricity on the screen's surface to discharge.
- After the power is turned on, the screen is demagnetized (degaussed) for about 5 seconds. This generates a strong magnetic field around the screen which may affect data stored on magnetic tapes and disks placed near the monitor. Be sure to keep magnetic recording equipment, tapes, and disks away from the monitor.

The equipment should be installed near an easily accessible outlet.

Installation

Do not install the monitor in the following places:

- on surfaces (rugs, blankets, etc.) or near materials (curtains, draperies, etc.) that may block the ventilation holes
- near heat sources such as radiators or air ducts, or in a place subject to direct sunlight
- in a place subject to severe temperature changes
- in a place subject to mechanical vibration or shock
- on an unstable surface
- near equipment which generates magnetism, such as a transformer or high voltage power lines
- near or on an electrically charged metal surface
- in a dusty or smoky environment
- into a wall or enclosure

Protection

- Do not put foreign objects into the monitor.
- Disconnect the monitor if environment exceeds 60°C/140°F.
- Ensure AC power cord is not trapped under furniture, TV, etc.
- Do not overload wall outlets, extension cords, or convenience receptacles beyond their capacity.

Maintenance

- Clean the screen with a soft cloth. If you use a glass cleaning liquid, do not use any type of cleaner containing an anti-static solution or similar additive as this may scratch the screen's coating.
- Do not rub, touch, or tap the surface of the screen with sharp or abrasive items such as a ballpoint pen or screwdriver. This type of contact may result in a scratched picture tube.
- Clean the cabinet, panel and controls with a soft cloth lightly moistened with a mild detergent solution. Do not use any type of abrasive pad, scouring powder or solvent, such as alcohol or benzene.

Transportation

When you transport this monitor for repair or shipment, use the original carton and packing materials.

Use of the tilt-swivel

This monitor can be adjusted within the angles shown below. To find the center of the monitor's turning radius, align the center of the monitor's screen with the centering line on the stand.
Hold the monitor at the bottom with both hands when you turn it horizontally or vertically. Be careful not to pinch your fingers at the back of the monitor when you tilt the monitor up vertically.

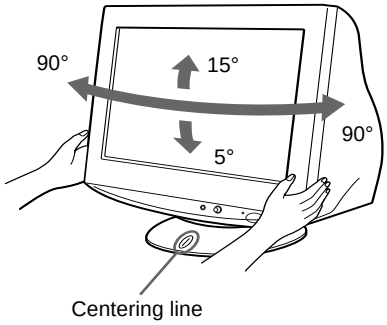

Downloaded from www.Manualslib.com manuals search engine

Identifying parts and controls

See the pages in parentheses for further details.

Front

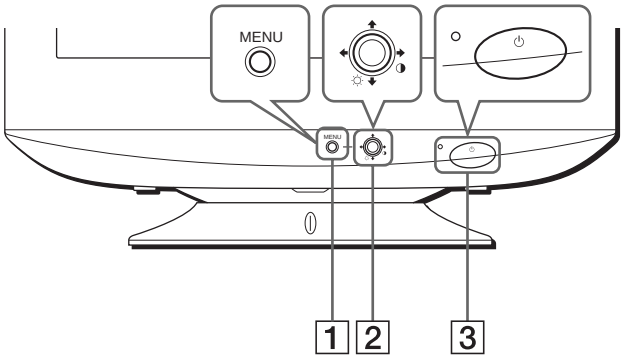

1 MENU/OK button (page 9)
The MENU/OK button is used to display the main MENU on your screen.

2 Joystick (page 9)
The joystick is used to navigate the menu and make adjustments to the monitor, including brightness and contrast adjustments.

3 ⏻ (power) switch and indicator (pages 7, 12, 15)
This button turns the monitor on and off. The power indicator lights up in green when the monitor is turned on or lights up in orange when the monitor is in power saving mode.

Side

For CPD-G220S model only

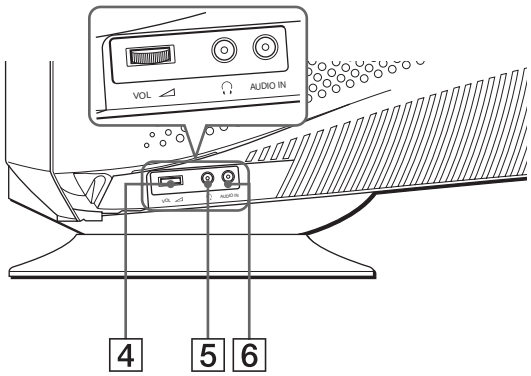

4 Volume (VOL) control
This control adujster is used to adjust the volume. Move the adjuster to the right to increase the volume. Move the adjuster to the left to decrease the volume.

5 Headset output
You can listen to the audio signals from your computer using headphones (not supplied). The speaker turns off when headphones are connected to the headphones jack. Adjust the volume using the volume control.

6 AUDIO IN input
You can listen to music, sounds, and other audio files using the speaker in your monitor.
Connect the AUDIO IN jack to the audio out jack of your computer's sound card using the miniplug cord (supplied).

Rear

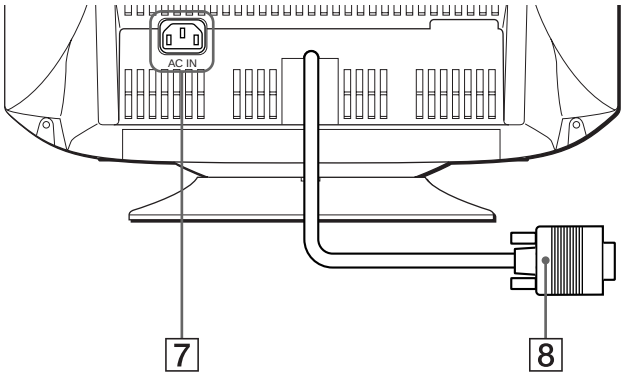

7 AC IN connector (page 6)
This connector provides AC power to the monitor.

8 Video input connector (HD15) (page 6)
This connector inputs RGB video signals (0.700 Vp-p, positive) and sync signals.

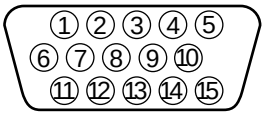

Pin No.	Signal
1	Red
2	Green (Sync on Green)
3	Blue
4	ID (Ground)
5	DDC Ground*
6	Red Ground
7	Green Ground
8	Blue Ground
9	DDC Host 5V*
10	Ground
11	ID (Ground)
12	Bi-Directional Data (SDA)*
13	H. Sync
14	V. Sync
15	Data Clock (SCL)*

* DDC (Display Data Channel) is a standard of VESA.

US

Downloaded from www.Manualslib.com manuals search engine

Setup

Before using your monitor, check that the following accessories are included in your carton:

- Power cord (1)
- Audio miniplug cord (1)
  for CPD-G220S model only
- Warranty card (1)
- Notes on cleaning the screen's surface (1)
- This instruction manual (1)
- Notice of Macintosh adapter availability (1)

Step 1: Connect your monitor to your computer

Turn off the monitor and computer before connecting.

Note

- Do not touch the pins of the video cable connector as this might bend the pins.

■ Connecting to an IBM PC/AT or compatible computer

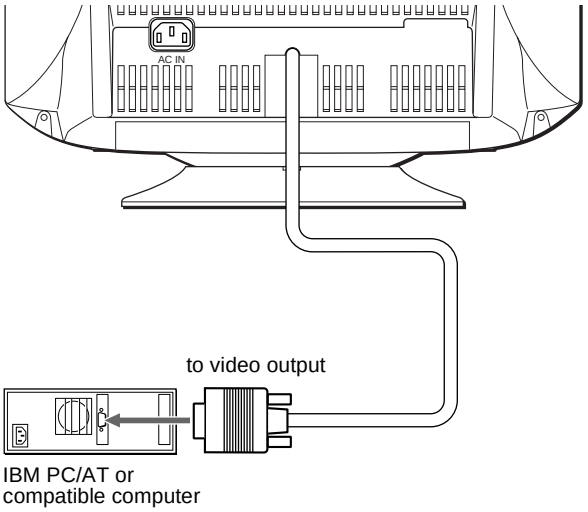

■ Connecting to a Macintosh or compatible computer

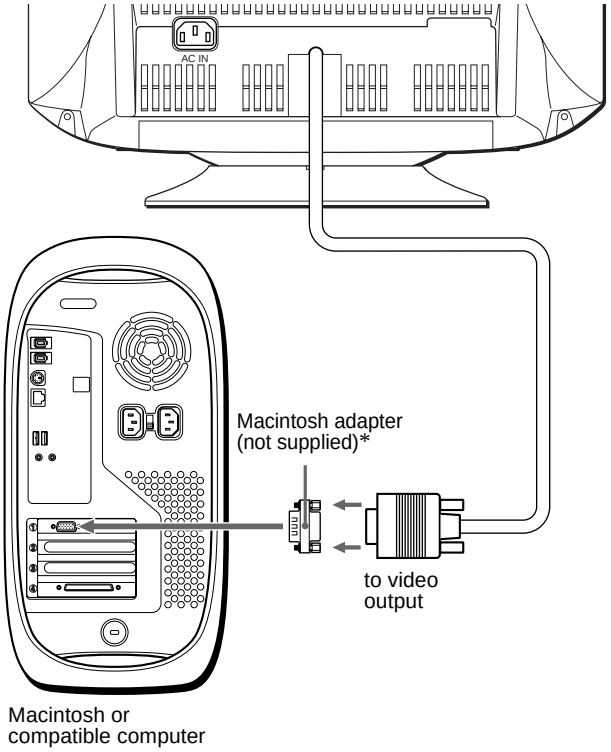

* Please refer to the Notice of Macintosh adapter availability.

Step 2: Connect the power cord

With the monitor and computer switched off, first connect the power cord to the monitor, then connect it to a power outlet.

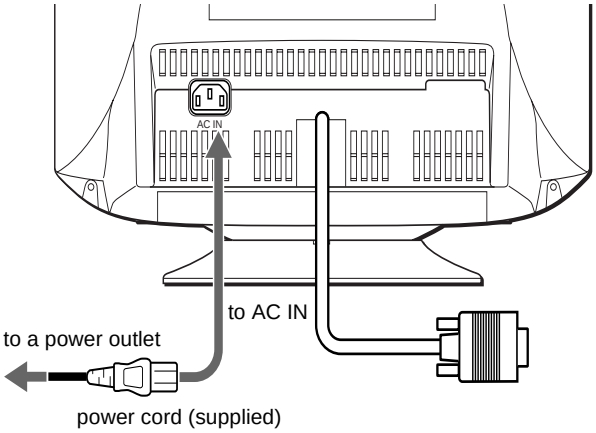

Downloaded from www.Manualslib.com manuals search engine

Step 3: Turn on the monitor and computer

First turn on the monitor, then turn on the computer.

The installation of your monitor is complete.
If necessary, use the monitor's controls to adjust the picture.

If no picture appears on your screen

- Check that the monitor is correctly connected to the computer.
- If NO INPUT SIGNAL appears on the screen, confirm that the video signal cable is properly connected and all plugs are firmly seated in their sockets.
- If MONITOR IS IN POWER SAVE MODE appeared on the screen, try pressing any key on the computer keyboard.
- If you are replacing an old monitor with this model and OUT OF SCAN RANGE appears on the screen, reconnect the old monitor. Then adjust the computer's graphic board so that the horizontal frequency is between 30 – 85 kHz, and the vertical frequency is between 48 – 170 Hz.

For more information about the on-screen messages, see "Trouble symptoms and remedies" on page 13.

Setup on Various OS (Operating System)

This monitor complies with the "DDC" Plug & Play standard and automatically detects all the monitor's information. No specific driver needs to be installed to the computer.
If you connect the monitor to your PC, and then boot your PC for the first time, the setup Wizard may be displayed on the screen. Click on "Next" several times according to the instructions from the Wizard until the Plug & Play Monitor is automatically selected so that you can use this monitor.

Adjusting the monitor's resolution and color number

Adjust the monitor's resolution and color number by referring to your computer's instruction manual. The color number may vary according to your computer or video board. The color palette setting and the actual number of colors are as follows:

- High Color (16 bit) ⟶ 65,536 colors
- True Color (24 bit) ⟶ about 16.77 million colors

In true color mode (24 bit), speed may be slower.

Selecting the on-screen menu language (LANGUAGE)

English, French, German, Spanish, Italian, Dutch, Swedish, Russian and Japanese versions of the on-screen menus are available. The default setting is English.

1 Press the MENU/OK button.
See page 9 for more information on using the MENU/OK button.

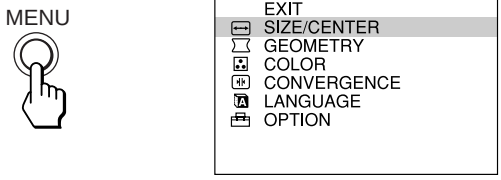

2 Move the joystick ↓/↑ to highlight LANGUAGE and press the MENU/OK button.

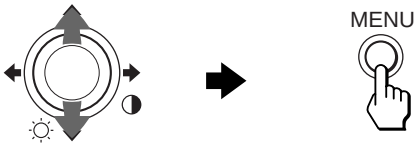

3 Move the joystick ↓/↑ to select a language.

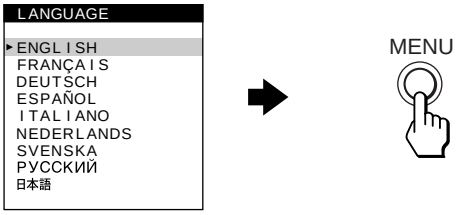

To close the menu

Press the MENU/OK once to return to the main MENU, and twice to return to normal viewing. If no buttons are pressed, the menu closes automatically after about 30 seconds.

US

Downloaded from www.Manualslib.com manuals search engine

Customizing Your Monitor

You can make numerous adjustments to your monitor using the on-screen menu.

Navigating the menu

Press the MENU/OK to display the main MENU on your screen. See page 9 for more information on using the MENU/OK button.

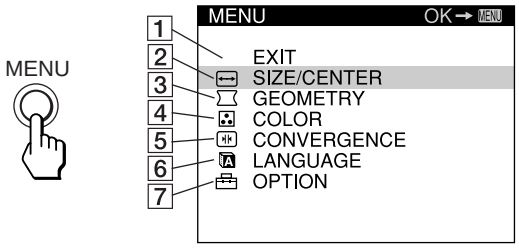

Use the joystick to select one of the following menus.

1 EXIT
Select EXIT to close the menu.

2 SIZE/CENTER (page 9)
Select the SIZE/CENTER menu to adjust the picture's size, centering, or zoom.

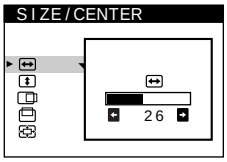

3 GEOMETRY (page 10)
Select the GEOMETRY menu to adjust the picture's rotation and shape.

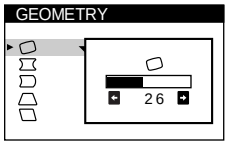

4 COLOR (page 10)
Select the COLOR menu to adjust the picture's color temperature. You can use this to match the monitor's colors to a printed picture's colors.

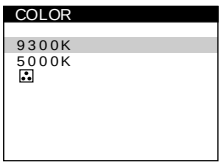

5 CONVERGENCE (page 10)
Select the CONVERGENCE menu to adjust the picture's horizontal and vertical convergence.

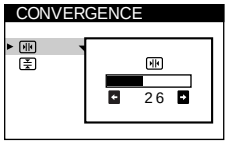

6 LANGUAGE (page 7, 10)
Select LANGUAGE to choose the on-screen menu's language.

7 OPTION (page 11)
Select OPTION to adjust the monitor's options. The options include:

- degaussing the screen
- adjusting the moire cancellation level
- resetting to factory settings
- locking the controls

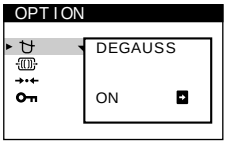

■ Displaying the current input signal

The horizontal and vertical frequencies of the current input signal are displayed in the main MENU. If the signal matches to one of the recommended VESA timing modes, the resolution is also displayed.

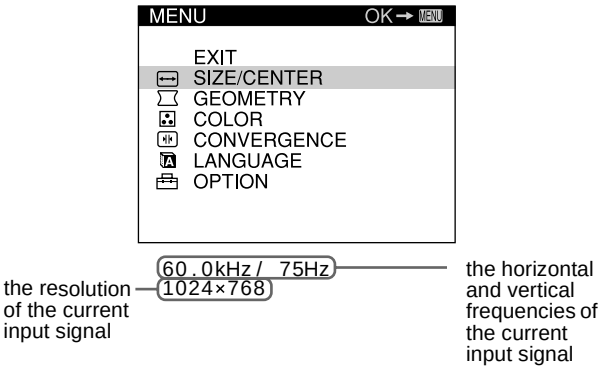

Downloaded from www.Manualslib.com manuals search engine

■ Using the MENU/OK button

1 Display the main MENU.
Press the MENU/OK button to display the main MENU on your screen.

2 Select the menu you want to adjust.
Highlight the desired menu by moving the joystick towards the top to go up (↑), towards the bottom to go down (↓). Press the MENU/OK button to select the desired menu.

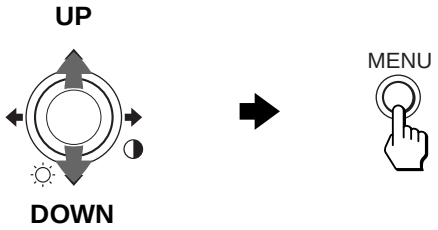

3 Adjust the menu.
Move the joystick left (←) or right (→) to make the adjustment.

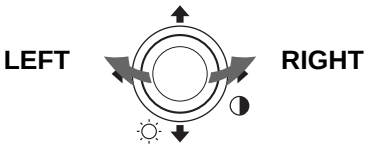

4 Close the menu.
Press the MENU/OK once to return to the main MENU, and twice to return to normal viewing. If no buttons are pressed, the menu closes automatically after about 30 seconds.

Adjusting the brightness and contrast

Brightness and contrast adjustments are made using a separate BRIGHTNESS/CONTRAST menu.

These settings are stored in memory for all input signals.

1 Move the joystick in any direction.
The BRIGHTNESS/CONTRAST menu appears on the screen.

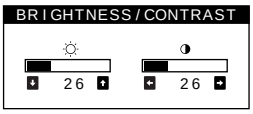

2 Move the joystick ↓/↑ to adjust the brightness (☼), and ←/→ to adjust the contrast (◑).
If no adjustments are made, the menu disappears automatically after about 3 seconds.

Adjusting the size and the centering of the picture (SIZE/CENTER)

US

This setting is stored in memory for the current input signal.

1 Press the MENU/OK button.
The main MENU appears on the screen.

2 Move the joystick ↓/↑ to highlight ⟷ SIZE/CENTER and press the MENU/OK button.
The SIZE/CENTER menu appears on the screen.

3 First move the joystick ↓/↑ to select the desired adjustment item. Then move the joystick ←/→ to adjust the setting.

Select	To
⟷	shift the picture to the left or right
↕	shift the picture up or down
⟷	enlarge or reduce the picture width
↕	enlarge or reduce the picture height
⤢	enlarge or reduce the picture width and height proportionally

Note
Adjustment stops when either the horizontal or vertical size reaches its maximum or minimum value.

Downloaded from www.Manualslib.com manuals search engine

Adjusting the shape of the picture (GEOMETRY)

The GEOMETRY settings allow you to adjust the rotation and shape of the picture.

The (rotation) setting is stored in memory for all input signals. All other settings are stored in memory for the current input signal.

1 Press the MENU/OK button.
The main MENU appears on the screen.

2 Move the joystick ↓/↑ to highlight GEOMETRY and press the MENU/OK button.
The GEOMETRY menu appears on the screen.

3 First move the joystick ↓/↑ to select the desired adjustment item. Then move the joystick ←/→ to adjust the setting.

Select	To
	rotate the picture
	expand or contract the picture sides
	shift the picture sides to the left or right
	adjust the picture width at the top or bottom of the screen
	shift the picture to the left or right at the top or bottom of the screen

Adjusting the color of the picture (COLOR)

The COLOR settings allow you to adjust the picture's color temperature by changing the color level of the white color field. Colors appear reddish if the temperature is low, and bluish if the temperature is high. This adjustment is useful for matching the monitor's colors to a printed picture's colors.

This setting is stored in memory for all input signals.

1 Press the MENU/OK button.
The main MENU appears on the screen.

2 Move the joystick ↓/↑ to highlight COLOR and press the MENU/OK button.
The COLOR menu appears on the screen.

3 Move the joystick ↓/↑ to select a color temperature.
The preset color temperatures are 5000K and 9300K. Since the default setting is 9300K, the whites will change from a bluish hue to a reddish hue as the temperature is lowered to 5000K.

4 If necessary, fine tune the color temperature.
You can select your own color temperature between 9300K and 5000K.
First move the joystick ↓/↑ to select . Then move the joystick ←/→ to adjust the color temperature.

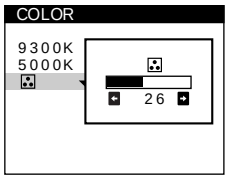

Adjusting the convergence (CONVERGENCE)

The CONVERGENCE settings allow you to adjust the quality of the picture by controlling the convergence. The convergence refers to the alignment of the red, green, and blue color signals. If you see red or blue shadows around letters or lines, adjust the convergence.

These settings are stored in memory for all input signals.

1 Move the MENU/OK button.
The main MENU appears on the screen.

2 Move the joystick ↓/↑ to highlight CONVERGENCE and press the MENU/OK button.
The CONVERGENCE menu appears on the screen.

3 First move the joystick ↓/↑ to select for horizontal adjustment, or for vertical adjustment. Then move the joystick ←/→ to adjust the convergence.

Changing the OSD language (LANGUAGE)

This setting is stored in memory for the current input signal.

1 Press the MENU/OK button.
The main MENU appears on the screen.

2 Move the joystick ↓/↑ to highlight LANGUAGE and press the MENU/OK button.
The LANGUAGE menu appears on the screen.

3 Press the joystick ↓/↑ to select the language you prefer.
The OSD automatically disappears after about 30 seconds. To close the OSD, press the MENU/OK button again.

For more information about the on-screen languages, see "Changing the OSD language (LANGUAGE)" on page 7.

Downloaded from www.Manualslib.com manuals search engine

Additional settings (OPTION)

You can manually degauss (demagnetize) the monitor, adjust the moire cancellation level, reset to factory setting, and lock the controls.

1 Press the MENU/OK button.
The main MENU appears on the screen.

2 Move the joystick ↓/↑ to highlight OPTION and press the MENU/OK button.
The OPTION menu appears on the screen.

3 Move the joystick ↓/↑ to select the desired adjustment item.
Adjust the selected item according to the following instructions.

Degaussing the screen

The monitor is automatically demagnetized (degaussed) when the power is turned on.

To manually degauss the monitor, first move the joystick ↓/↑ to select (DEGAUSS). Then move the joystick →.

The screen is degaussed for about 5 seconds. If a second degauss cycle is needed, allow a minimum interval of 20 minutes for the best result.

Adjusting the moire*

If elliptical or wavy patterns appear on the screen, adjust the moire cancellation level.

To adjust the amount of moire cancellation, first move the joystick ↓/↑ to select (MOIRE ADJUST). Then move the joystick ←/→ until the moire effect is at a minimum.

* Moire is a type of natural interference which produces soft, wavy lines on your screen. It may appear due to interference between the pattern of the picture on the screen and the phosphor pitch pattern of the monitor.

Example of moire

Resetting the adjustments

The RESET option erases your customized setting.

To restore your monitor to the factory setting, first move the joystick ↓/↑ to select (RESET). Then move the joystick →, to reset the adjustment for current input signal. Hold the joystick → for 2 seconds to reset the adjustment for all input signals.

Note

When “reset the adjustment for all input signal” is activated, the customized language selection goes back to the default language of English.

Locking the controls

To protect adjustment data by locking the controls, first move the joystick ↓/↑ to select (CONTROL LOCK). Then move the joystick →, to select ON.

Only the (power) switch, EXIT, and (CONTROL LOCK) of the OPTION menu will operate. If any other items are selected, the mark appears on the screen.

To cancel the control lock

Repeat the procedure above and set (CONTROL LOCK) to OFF.

US

Downloaded from www.Manualslib.com manuals search engine

Technical Features

Preset and user modes

When the monitor receives an input signal, it automatically matches the signal to one of the factory preset modes stored in the monitor's memory to provide a high quality picture at the center of the screen. (See Appendix for a list of the factory preset modes.) For input signals that do not match one of the factory preset modes, the digital Multiscan technology of this monitor ensures that a clear picture appears on the screen for any timing in the monitor's frequency range (horizontal: 30 – 85 kHz, vertical: 48 – 170 Hz). If the picture is adjusted, the adjustment data is stored as a user mode and automatically recalled whenever the same input signal is received.

Note for Windows users

For Windows users, check your video board manual or the utility program which comes with your graphic board and select the highest available refresh rate to maximize monitor performance.

Power saving function

This monitor meets the power-saving guidelines set by VESA, ENERGY STAR, and NUTEK. If no signal is received by the monitor from the connected computer, the monitor will automatically reduce power consumption as shown below.

Power mode	Power consumption	⏻ (power) indicator
normal operation	≤ 115 W	green
active off*	≤ 3 W	orange**
power off	0 W (Approx.)	off

* When your computer is in active off mode, MONITOR IS IN POWER SAVE MODE appears on the screen if you press any button on the monitor. After a few seconds, the monitor enters the power saving mode again.

** If the horizontal or vertical sync signal is received by the monitor, the power indicator lights in orange.

Troubleshooting

Before contacting technical support, refer to this section.

If thin lines appear on your screen (damper wires)

The lines you are experiencing on your screen are normal for the Trinitron monitor and are not a malfunction. These are shadows from the damper wires used to stabilize the aperture grille and are most noticeable when the screen's background is light (usually white). The aperture grille is the essential element that makes a Trinitron picture tube unique by allowing more light to reach the screen, resulting in a brighter, more detailed picture.

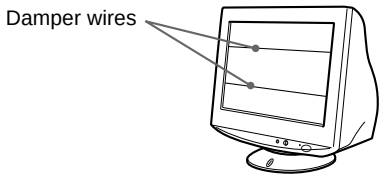

On-screen messages

If no picture appears on the screen, one of the following messages appears on the screen. To solve the problem, see "Trouble symptoms and remedies" on page 13.

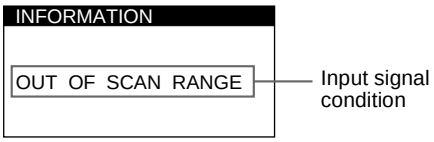

The input signal condition

OUT OF SCAN RANGE

indicates that the input signal is not supported by the monitor's specifications.

NO INPUT SIGNAL

indicates that no input signal is present.

MONITOR IS IN POWER SAVE MODE

indicates that the computer is in power saving mode. This message is displayed only when your computer is in a power saving mode and you press any one of the buttons on the monitor.

Downloaded from www.Manualslib.com manuals search engine

Trouble symptoms and remedies

If the problem is caused by the connected computer or other equipment, please refer to the connected equipment's instruction manual. Use the self-diagnosis function (page 15) if the following recommendations do not resolve the problem.

Symptom	Check these items
No picture	
If the ⏻ (power) indicator is not lit	• Check that the power cord is properly connected. • Check that the ⏻ (power) switch is in the "on" position.
If the NO INPUT SIGNAL message appears on the screen, or if the ⏻ (power) indicator is orange	• Check that the video signal cable is properly connected and all plugs are firmly seated in their sockets (page 6). • Check that the HD15 video input connector's pins are not bent or pushed in. **■Problems caused by the connected computer or other equipment** • Check that the computer's power is "on." • Check that the graphic board is completely seated in the proper bus slot.
If the MONITOR IS IN POWER SAVE MODE message appears on the screen, or if the ⏻ (power) indicator is orange	**■Problems caused by the connected computer or other equipment** • The computer is in power saving mode. Try pressing any key on the computer keyboard. • Check that the computer's power is "on." • Check that the graphic board is completely seated in the proper bus slot.
If the OUT OF SCAN RANGE message appears on the screen	**■Problems caused by the connected computer or other equipment** • Check that the video frequency range is within that specified for the monitor. If you replaced an old monitor with this monitor, reconnect the old monitor and adjust the frequency range to the following. Horizontal: 30 – 85 kHz Vertical: 48 – 170 Hz
If no message is displayed and the ⏻ (power) indicator is green or flashing orange	• Use the Self-diagnosis function (page 15).
If using a Macintosh system	• Check that the Macintosh adapter and the video signal cable are properly connected (page 6).
Picture flickers, bounces, oscillates, or is scrambled	• Isolate and eliminate any potential sources of electric or magnetic fields such as other monitors, laser printers, electric fans, fluorescent lighting, or televisions. • Move the monitor away from power lines or place a magnetic shield near the monitor. • Try plugging the monitor into a different AC outlet, preferably on a different circuit. • Try turning the monitor 90° to the left or right. **■Problems caused by the connected computer or other equipment** • Check your graphics board manual for the proper monitor setting. • Confirm that the graphics mode (VESA, Macintosh 16" Color, etc.) and the frequency of the input signal are supported by this monitor (Appendix). Even if the frequency is within the proper range, some video boards may have a sync pulse that is too narrow for the monitor to sync correctly. • Adjust the computer's refresh rate (vertical frequency) to obtain the best possible picture.
Picture is fuzzy	• Adjust the brightness and contrast (page 9). • Degauss the monitor* (page 11). • Select MOIRE ADJUST and adjust the moire cancellation effect (page 11).

US

Downloaded from www.Manualslib.com manuals search engine

Symptom	Check these items
Picture is ghosting	• Eliminate the use of video cable extensions and/or video switch boxes. • Check that all plugs are firmly seated in their sockets.
Picture is not centered or sized properly	• Adjust the size (page 9) or centering (page 9). Note that some video modes do not fill the screen to the edges.
Edges of the image are curved	• Adjust the geometry (page 10).
Wavy or elliptical pattern (moire) is visible	• Select MOIRE ADJUST and adjust the moire cancellation effect (page 11). **■Problems caused by the connected computer or other equipment** • Change your desktop pattern.
Color is not uniform	• Degauss the monitor* (page 11). If you place equipment that generates a magnetic field, such as a speaker, near the monitor, or if you change the direction the monitor faces, color may lose uniformity.
White does not look white	• Adjust the color temperature (page 10).
Letters and lines show red or blue shadows at the edges	• Adjust the convergence (page 10).
Monitor buttons do not operate	• If the control lock is set to ON, set it to OFF (page 11).
A hum is heard right after the power is turned on	• This is the sound of the auto-degauss cycle. When the power is turned on, the monitor is automatically degaussed for five seconds.

* If a second degauss cycle is needed, allow a minimum interval of 20 minutes for the best result. A humming noise may be heard, but this is not a malfunction.

Displaying this monitor's name, serial number, and date of manufacture.

While the monitor is receiving a video signal, press and hold the center of the MENU/OK button for more than five seconds to display this monitor's information box.

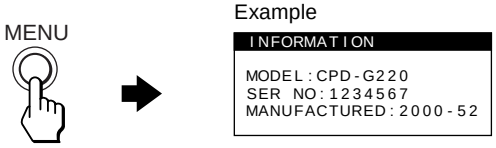

If the problem persists, call your authorized Sony dealer and give the following information.

- Model name: CPD-G220*****
- Serial number
- Name and specifications of your computer and graphics board.

Downloaded from www.Manualslib.com manuals search engine

Self-diagnosis function

This monitor is equipped with a self-diagnosis function. If there is a problem with your monitor or computer, the screen will go blank and the ⏻ (power) indicator will either light up green or flash orange. If the ⏻ (power) indicator is lit in orange, the computer is in power saving mode. Try pressing any key on the keyboard.

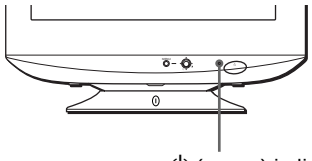

If the screen is blank and the ⏻ (power) indicator is green

1 Disconnect the video input cable or turn off the connected computer.

2 Press the ⏻ (power) button twice to turn the monitor off and then on.

3 Move the joystick ➡ for 2 seconds.

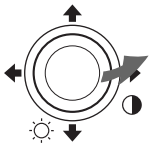

If all four color bars appear (white, red, green, blue), the monitor is working properly. Reconnect the video input cable and check the condition of your computer.

If the color bars do not appear, there is a potential monitor failure. Inform your authorized Sony dealer of the monitor's condition.

If the ⏻ (power) indicator is flashing orange

Press the ⏻ (power) button twice to turn the monitor off and then on.

If the ⏻ (power) indicator lights up green, the monitor is working properly.

If the ⏻ (power) indicator is still flashing, there is a potential monitor failure. Count the number of seconds between orange flashes of the ⏻ (power) indicator and inform your authorized Sony dealer of the monitor's condition. Be sure to note the model name and serial number of your monitor. Also note the make and model of your computer and video board.

Specifications

CRT	0.24 mm aperture grille pitch (center) 17 inches measured diagonally 90-degree deflection FD Trinitron
Viewable image size	Approx. 328 × 242 mm (w/h) (13 × 9 5/8 inches)
Viewing image	408 mm (16.1 inches)
Resolution	
Maximum	Horizontal: 1600 dots Vertical: 1200 lines
Recommended	Horizontal: 1024 dots Vertical: 768 lines
Standard image area	Approx. 312 × 234 mm (w/h) (12 3/8 × 9 1/4 inches)
Deflection frequency*	Horizontal: 30 to 85 kHz Vertical: 48 to 170 Hz
AC input voltage/current	100 to 240 V, 50/60 Hz, Max. 1.7 A
Power consumption	115 W
Dimensions	Approx. 402 × 418 × 421 mm (w/h/d) (15 7/8 × 16 1/2 × 16 5/8 inches)
Monitor weight	Approx. 19 kg (41.9 lb)
Plug and Play	DDC2B/DDC2Bi/GTF
Supplied accessories	See page 6

For CPD-G220S model only

Audio Input	Input Impedance: 47 kΩ Input Level: 0.5 Vrms (typical) Input Connector Stereo mini jack
Headset Output	Output Level: 1.5 mW + 1.5 mW (RL: 16 W/Input: 0.5 Vrms) Output Connector Stereo mini jack
Speaker Output	0.5 W (Max.)

* Recommended horizontal and vertical timing condition
- Horizontal sync width should be more than 1.0 µsec.
- Horizontal blanking width should be more than 3.0 µsec.
- Vertical blanking width should be more than 500 µsec.

Design and specifications are subject to change without notice.

US

Downloaded from www.Manualslib.com manuals search engine

Downloaded from www.Manualslib.com manuals search engine

Appendix

Preset mode timing table

No.	Resolution (dots × lines)	Horizontal Frequency	Vertical Frequency	Graphics Mode
1	640 × 480	31.5 kHz	60 Hz	VGA-G
2	640 × 480	43.3 kHz	85 Hz	VESA
3	720 × 400	31.5 kHz	70 Hz	VGA-Text
4	800 × 600	53.7 kHz	85 Hz	VESA
5	832 × 624	49.7 kHz	75 Hz	Macintosh 16" Color
6	1024 × 768	60.0 kHz	75 Hz	VESA
7	1024 × 768	68.7 kHz	85 Hz	VESA
8	1280 × 1024	80.0 kHz	75 Hz	VESA

If the input signal does not match one of the factory preset modes above, the Generalized Timing Formula feature of this monitor will automatically provide an optimal image for the screen as long as the signal is GTF compliant.

TCO’99 Eco-document

■ Congratulations!

You have just purchased a TCO’99 approved and labelled product! Your choice has provided you with a product developed for professional use. Your purchase has also contributed to reducing the burden on the environment and also to the further development of environmentally adapted electronics products.

■ Why do we have environmentally labelled computers?

In many countries, environmental labelling has become an established method for encouraging the adaptation of goods and services to the environment. The main problem, as far as computers and other electronics equipment are concerned, is that environmentally harmful substances are used both in the products and during their manufacture. Since it is not so far possible to satisfactorily recycle the majority of electronics equipment, most of these potentially damaging substances sooner or later enter nature.

There are also other characteristics of a computer, such as energy consumption levels, that are important from the viewpoints of both the work (internal) and natural (external) environments. Since all methods of electricity generation have a negative effect on the environment (e.g. acidic and climate-influencing emissions, radioactive waste), it is vital to save energy. Electronics equipment in offices is often left running continuously and thereby consumes a lot of energy.

■ What does labelling involve?

This product meets the requirements for the TCO’99 scheme which provides for international and environmental labelling of personal computers. The labelling scheme was developed as a joint effort by the TCO (The Swedish Confederation of Professional Employees), Svenska Naturskyddsforeningen (The Swedish Society for Nature Conservation) and Statens Energimyndighet (The Swedish National Energy Administration).

Approval requirements cover a wide range of issues: environment, ergonomics, usability, emission of electric and magnetic fields, energy consumption and electrical and fire safety.

(continued)

Downloaded from www.Manualslib.com manuals search engine

The environmental demands impose restrictions on the presence and use of heavy metals, brominated and chlorinated flame retardants, CFCs (freons) and chlorinated solvents, among other things. The product must be prepared for recycling and the manufacturer is obliged to have an environmental policy which must be adhered to in each country where the company implements its operational policy.

The energy requirements include a demand that the computer and/or display, after a certain period of inactivity, shall reduce its power consumption to a lower level in one or more stages. The length of time to reactivate the computer shall be reasonable for the user.

Labelled products must meet strict environmental demands, for example, in respect of the reduction of electric and magnetic fields, physical and visual ergonomics and good usability.

Below you will find a brief summary of the environmental requirements met by this product. The complete environmental criteria document may be ordered from:

TCO Development
SE-114 94 Stockholm, Sweden
Fax: +46 8 782 92 07
Email (Internet): development@tco.se
Current information regarding TCO'99 approved and labelled products may also be obtained via the Internet, using the address: http://www.tco-info.com/

■ Environmental requirements

Flame retardants

Flame retardants are present in printed circuit boards, cables, wires, casings and housings. Their purpose is to prevent, or at least to delay the spread of fire. Up to 30% of the plastic in a computer casing can consist of flame retardant substances. Most flame retardants contain bromine or chloride, and those flame retardants are chemically related to another group of environmental toxins, PCBs. Both the flame retardants containing bromine or chloride and the PCBs are suspected of giving rise to severe health effects, including reproductive damage in fish-eating birds and mammals, due to the bio-accumulative* processes. Flame retardants have been found in human blood and researchers fear that disturbances in foetus development may occur.

The relevant TCO'99 demand requires that plastic components weighing more than 25 grams must not contain flame retardants with organically bound bromine or chlorine. Flame retardants are allowed in the printed circuit boards since no substitutes are available.

Cadmium**

Cadmium is present in rechargeable batteries and in the colour-generating layers of certain computer displays. Cadmium damages the nervous system and is toxic in high doses. The relevant TCO'99 requirement states that batteries, the colour-generating layers of display screens and the electrical or electronics components must not contain any cadmium.

Mercury**

Mercury is sometimes found in batteries, relays and switches. It damages the nervous system and is toxic in high doses. The relevant TCO'99 requirement states that batteries may not contain any mercury. It also demands that mercury is not present in any of the electrical or electronics components associated with the labelled unit.

CFCs (freons)

The relevant TCO'99 requirement states that neither CFCs nor HCFCs may be used during the manufacture and assembly of the product. CFCs (freons) are sometimes used for washing printed circuit boards. CFCs break down ozone and thereby damage the ozone layer in the stratosphere, causing increased reception on earth of ultraviolet light with e.g. increased risks of skin cancer (malignant melanoma) as a consequence.

Lead**

Lead can be found in picture tubes, display screens, solders and capacitors. Lead damages the nervous system and in higher doses, causes lead poisoning. The relevant TCO'99 requirement permits the inclusion of lead since no replacement has yet been developed.

* Bio-accumulative is defined as substances which accumulate within living organisms.
** Lead, Cadmium, and Mercury are heavy metals which are Bio-accumulative.

Downloaded from www.Manualslib.com manuals search engine

Sony online http://www.world.sony.com/

Sony Corporation

Printed in U.S.A.

Downloaded from www.Manualslib.com manuals search engine